How to Build?

SPIKE PRIME Scorpion

LEGO education vives
INNOVATION STUDIO

YouTube

Free building instructions !

By Dimi

LEGO® Education Academy Certified Trainer

Free buildinginstructions & program:
www.legostudiovives.be/bouwideeen

You Need:
1 x SPIKE Prime Education Set 45678
1 x SPIKE Prime Expansion Set 45680
6 x Liftarm 3 x 5 L-Shape Thick 32526
42134
46372
2 x Axle and Pin Connector + Gear 28 Tooth Double Bevel
4 x Liftarm 1 x 9 Bent (7 - 3) Thick 32271

1

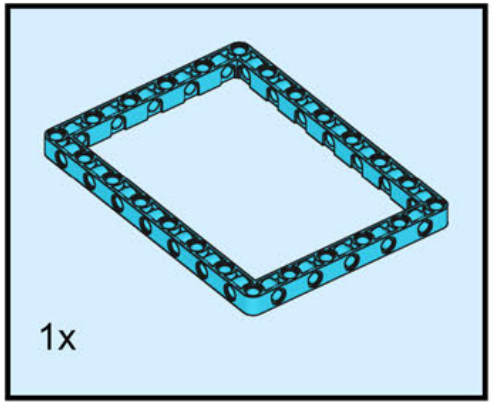

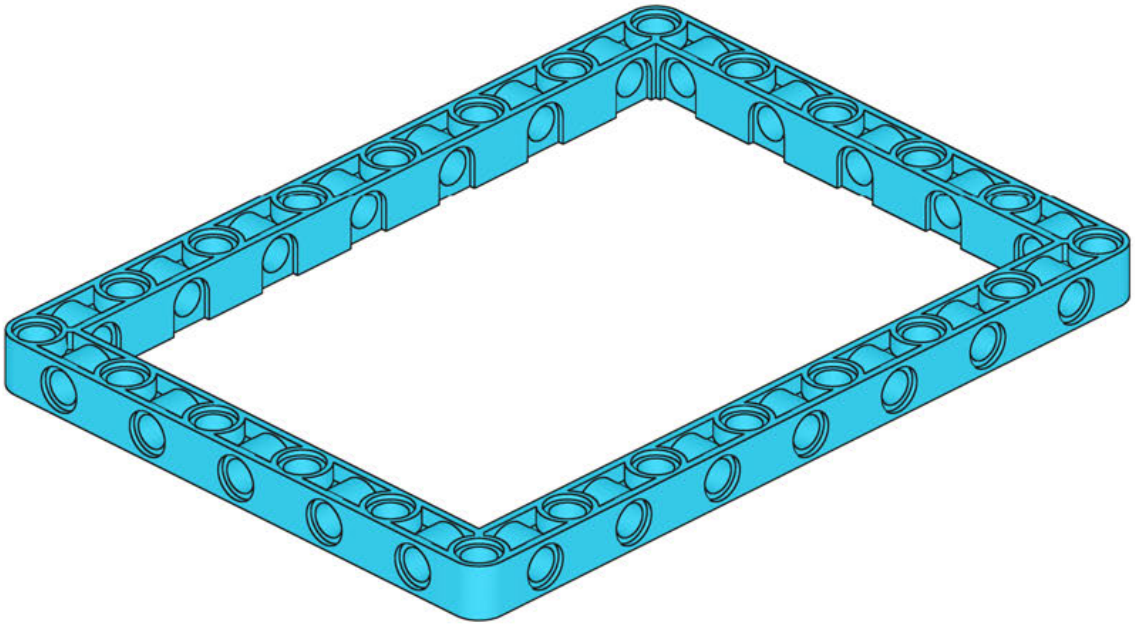

2

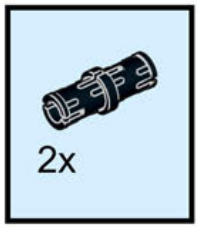

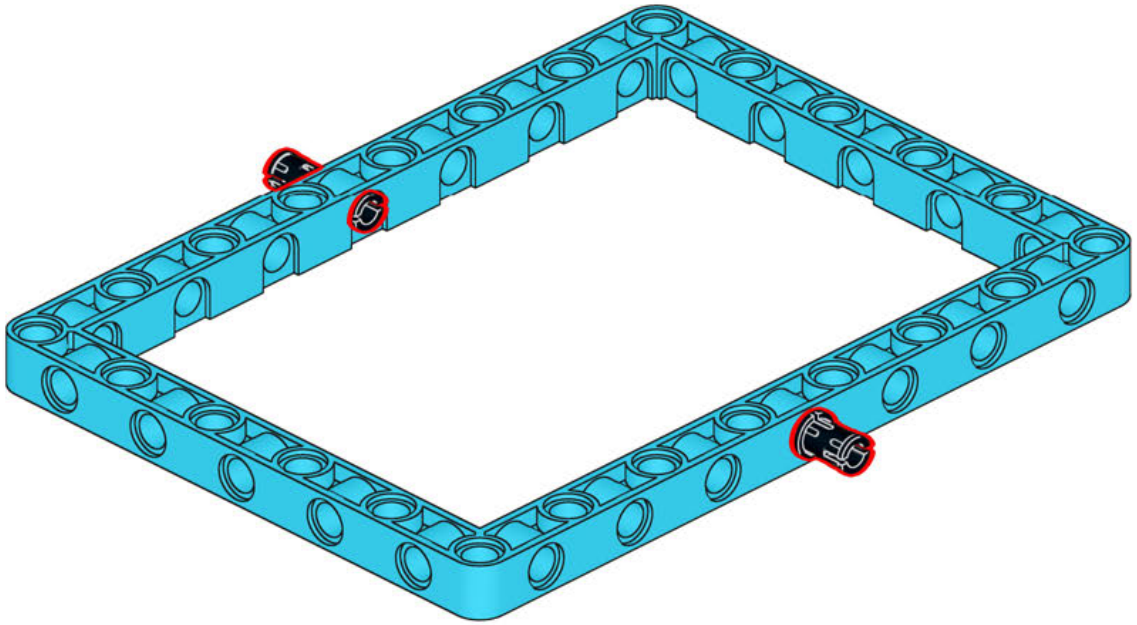

3

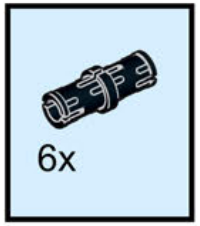

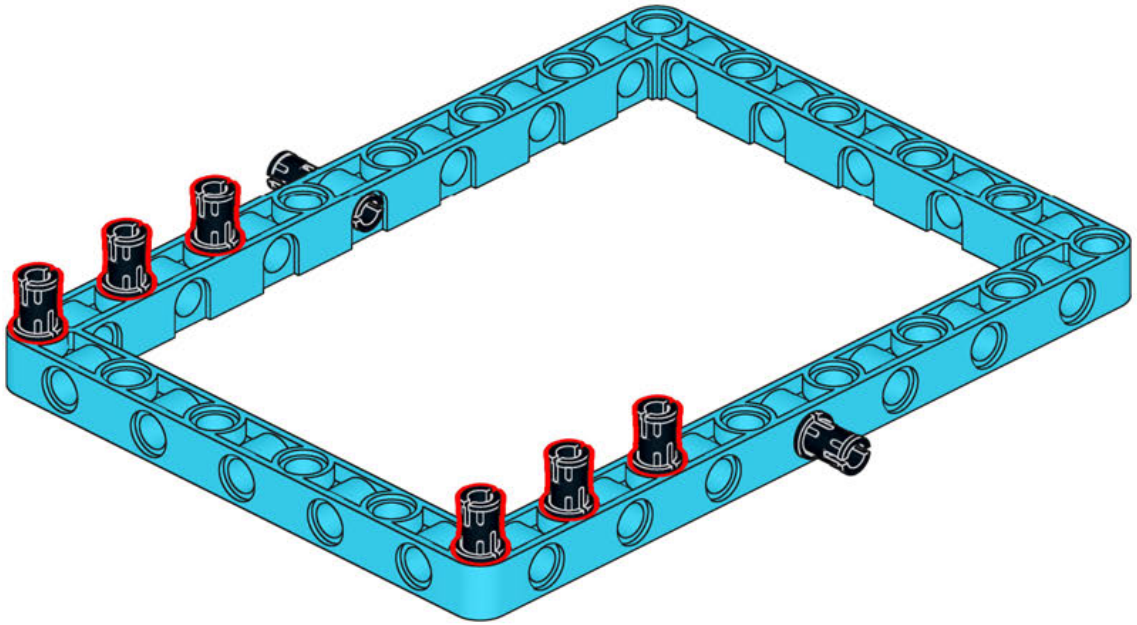

4

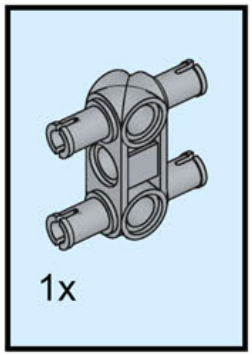

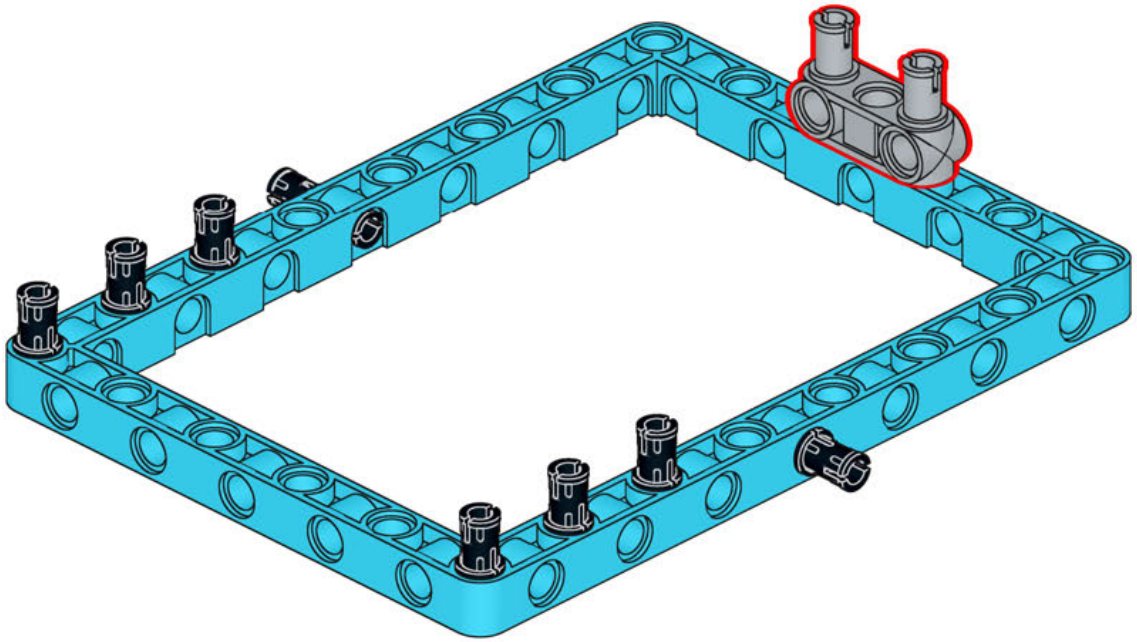

5

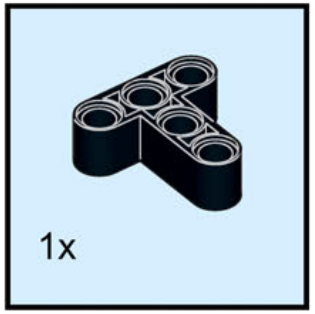

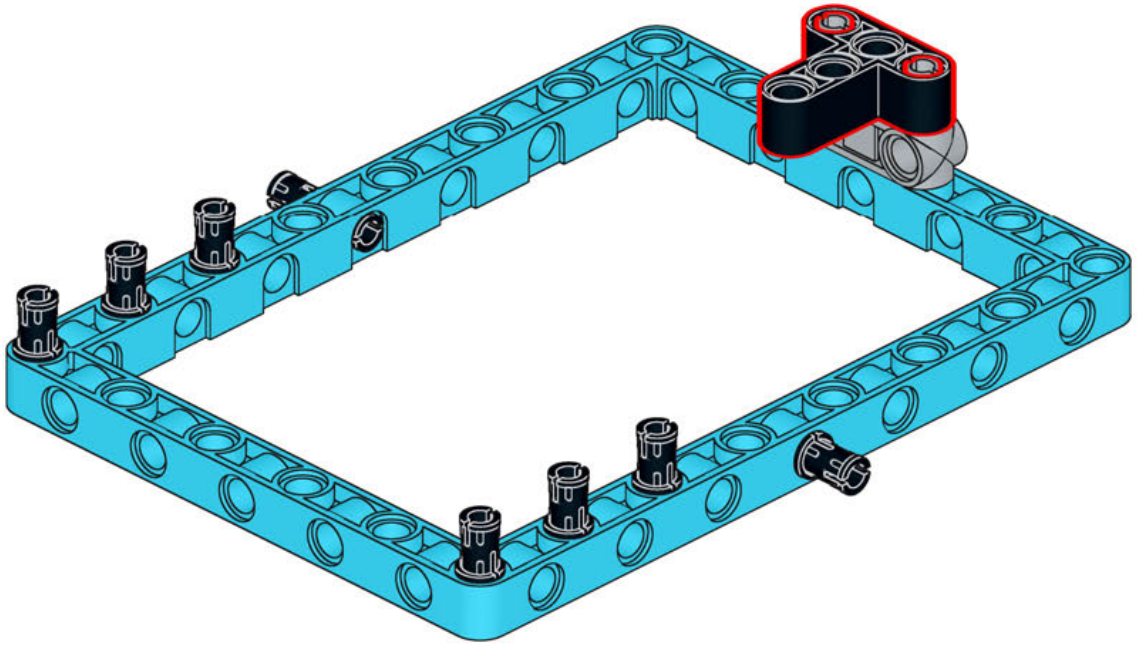

6

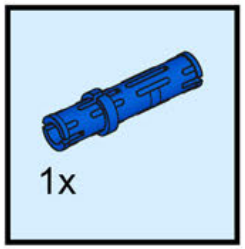

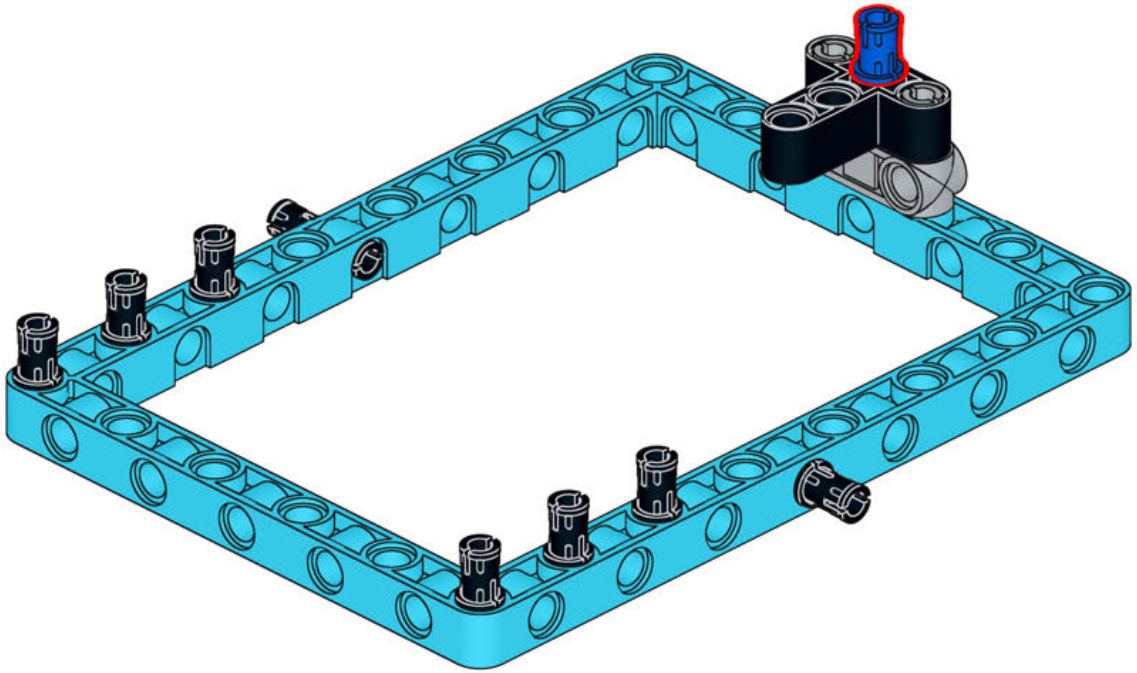

7

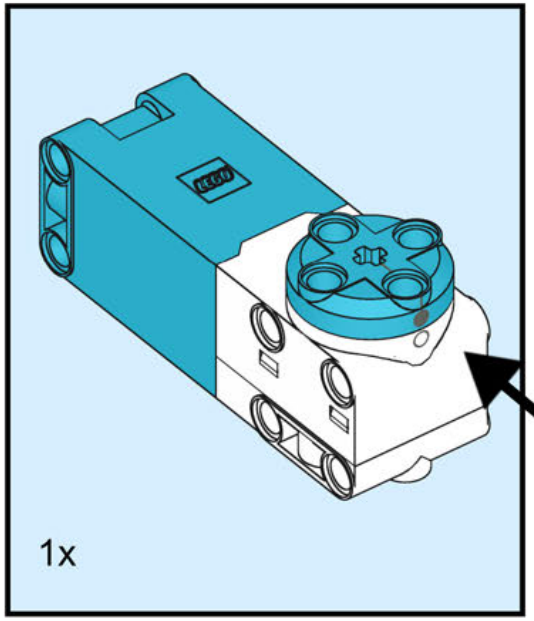

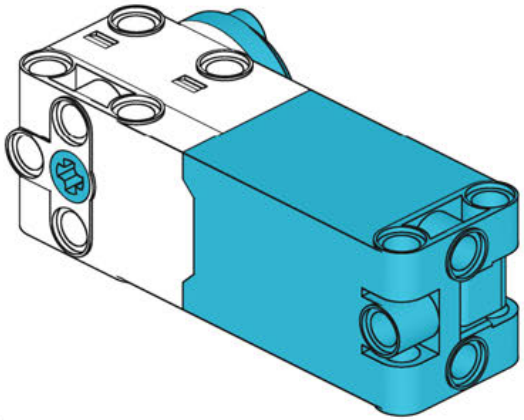

Rotate motor to zero position!

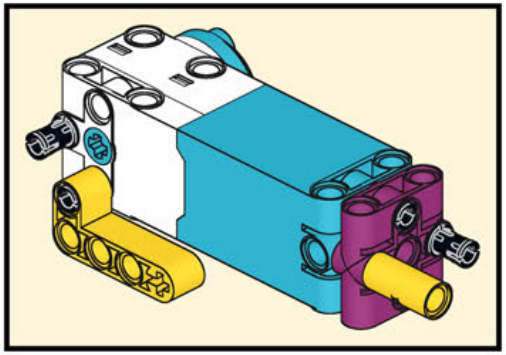

8

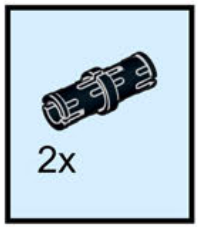

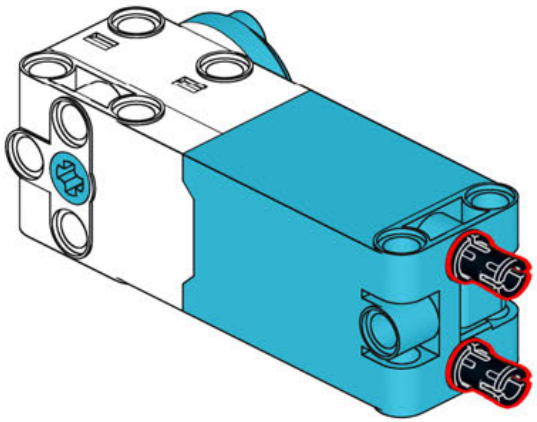

9

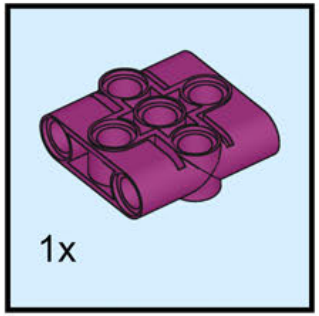

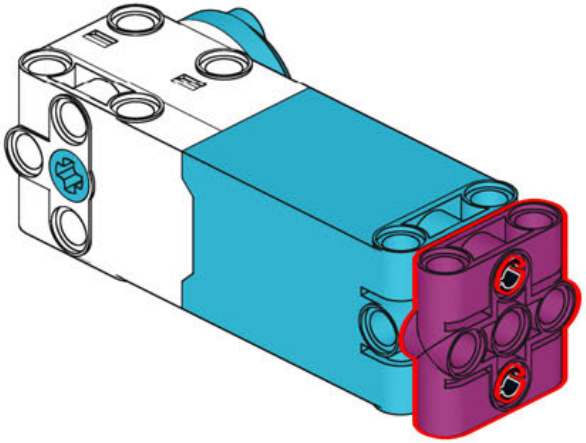

10

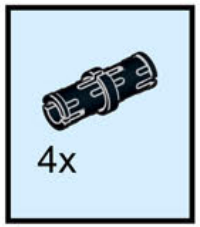

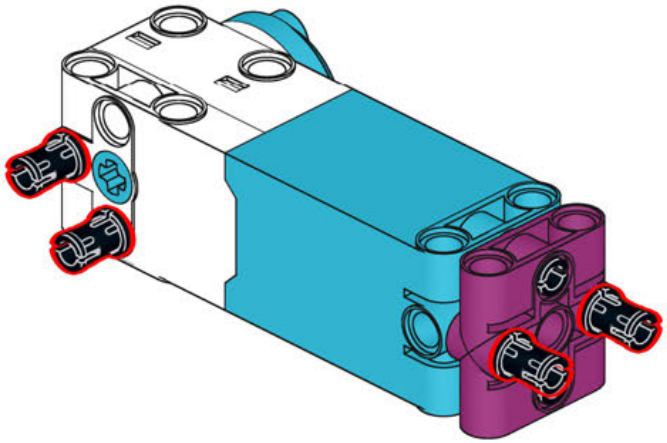

11

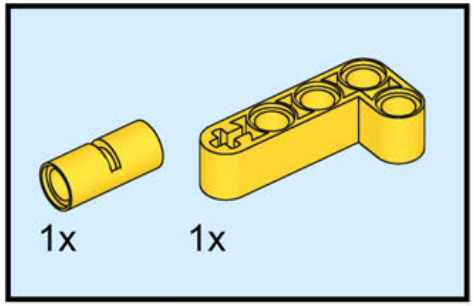

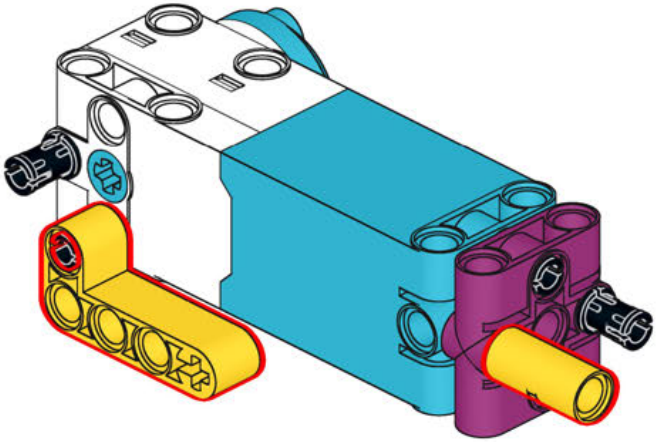

12

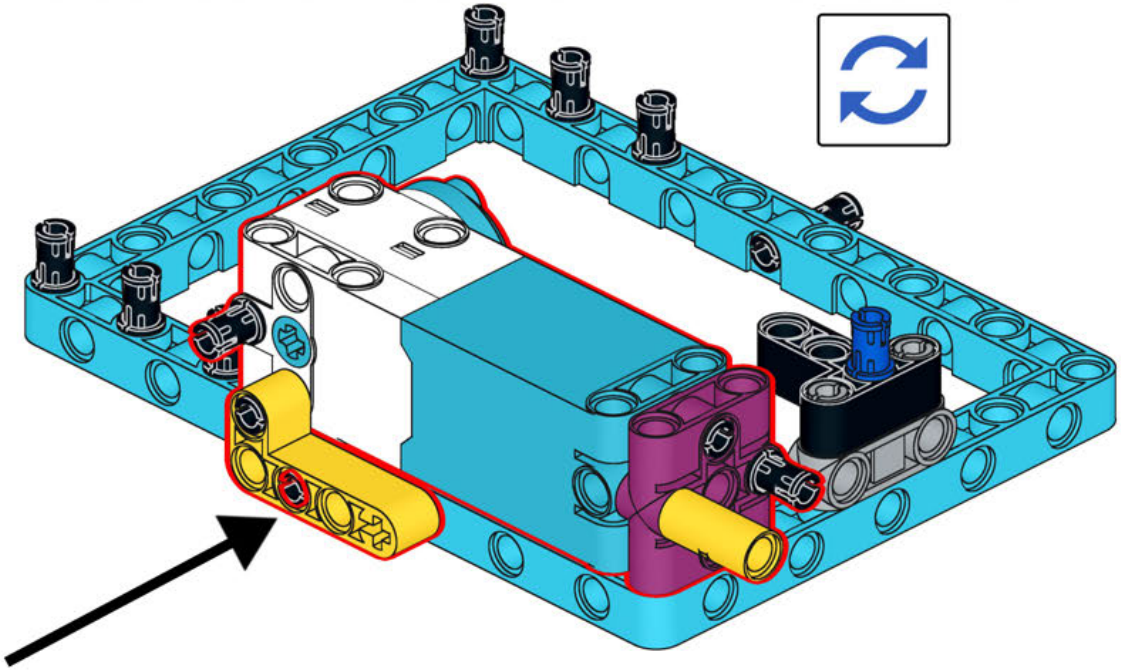

13

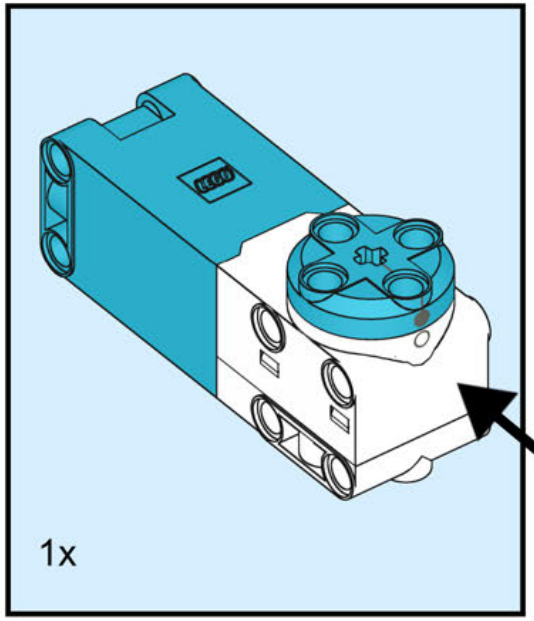

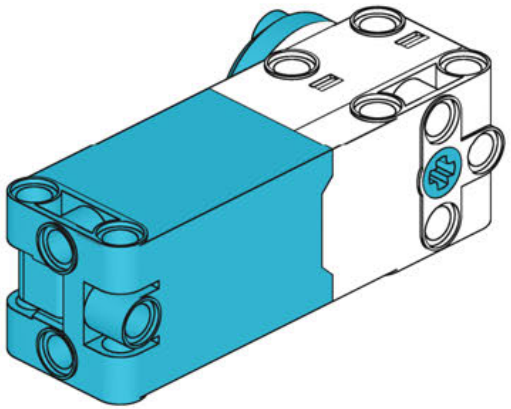

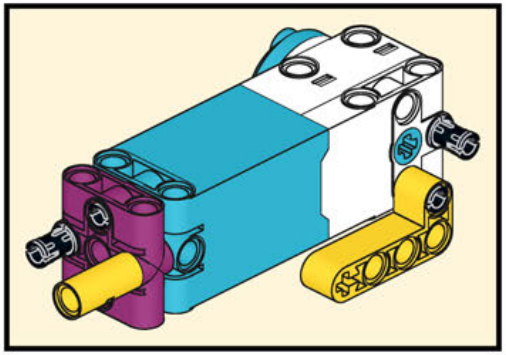

Rotate motor to zero position!

14

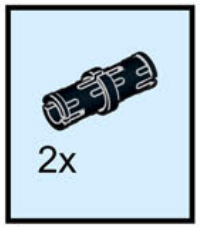

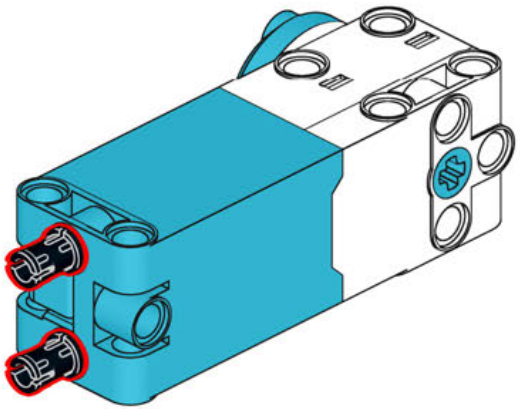

15

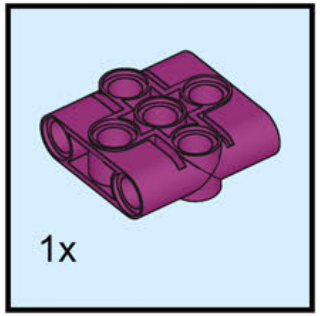

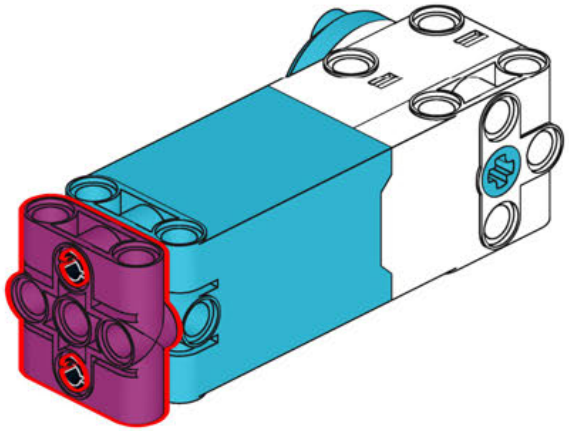

16

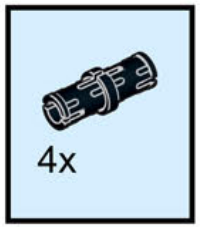

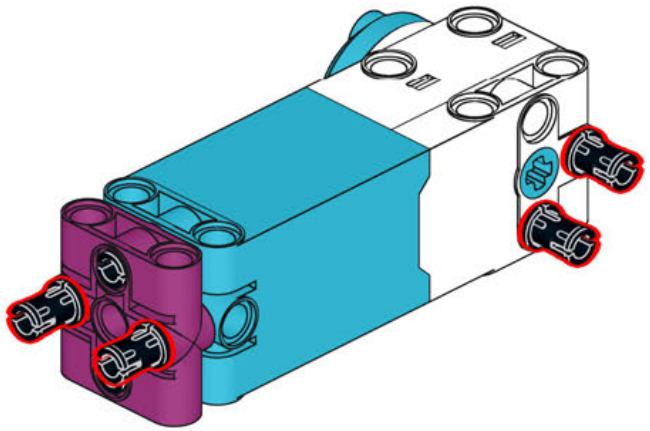

17

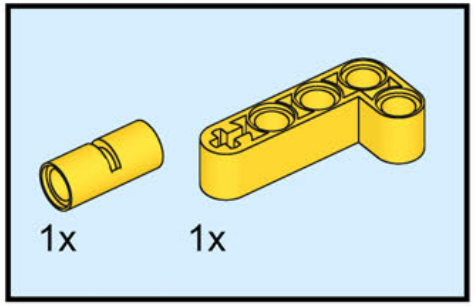

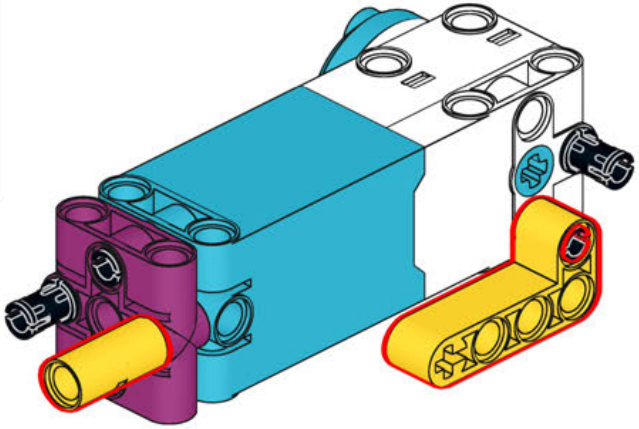

18

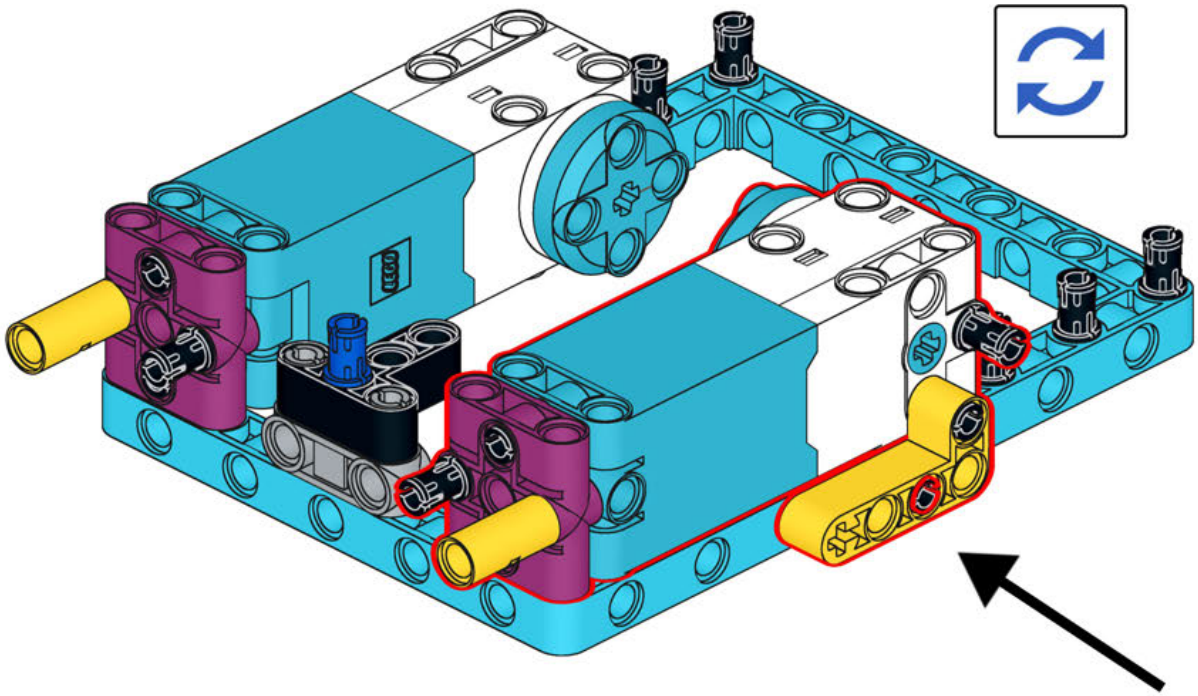

19

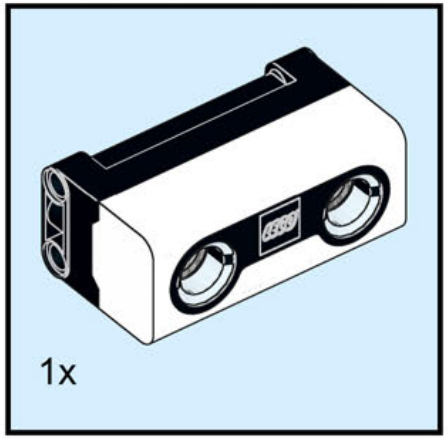

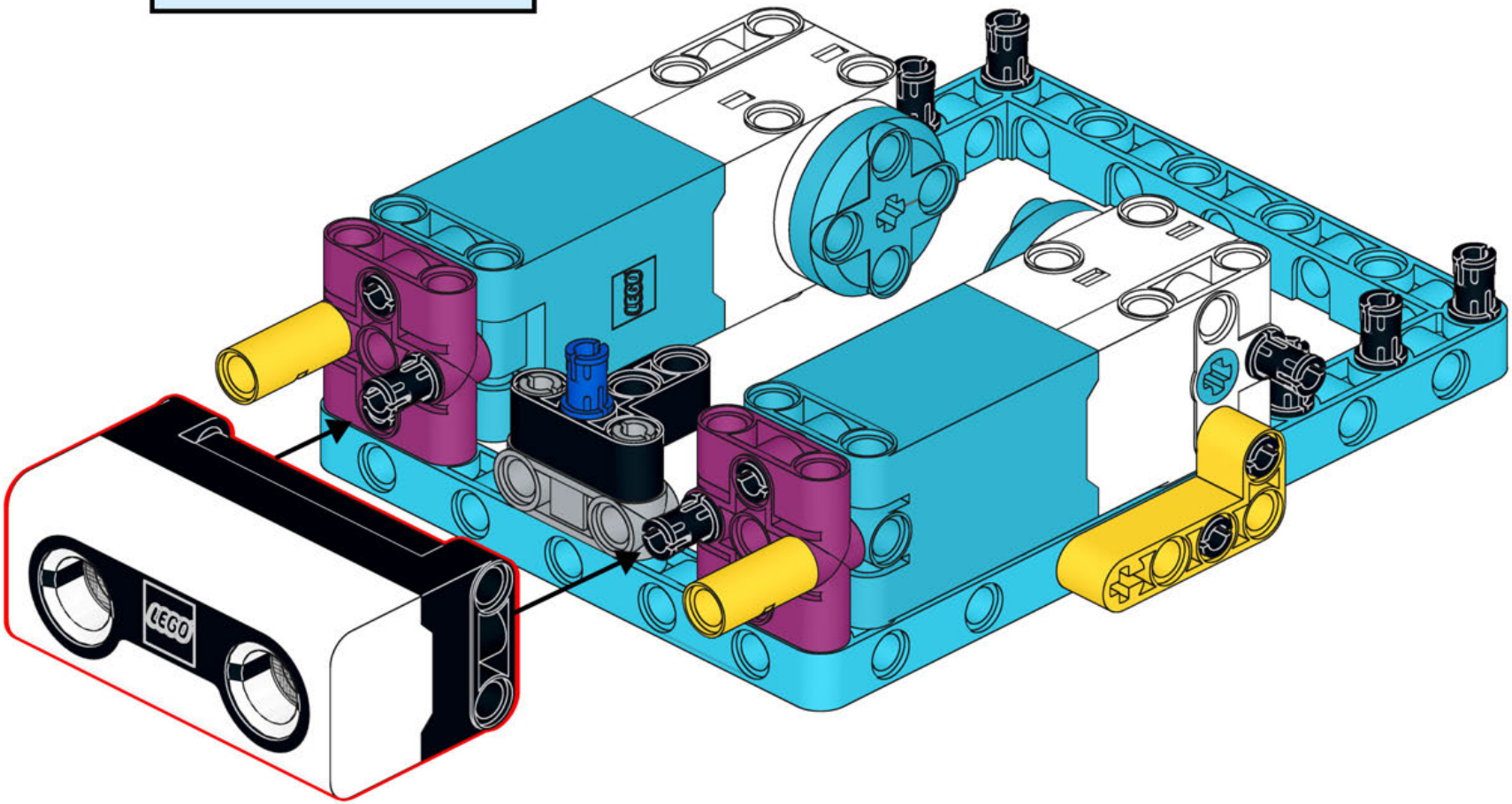

20

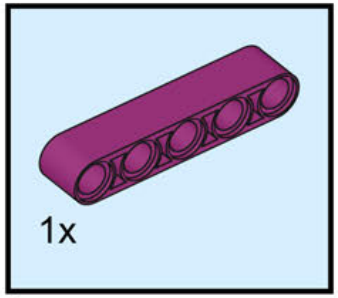

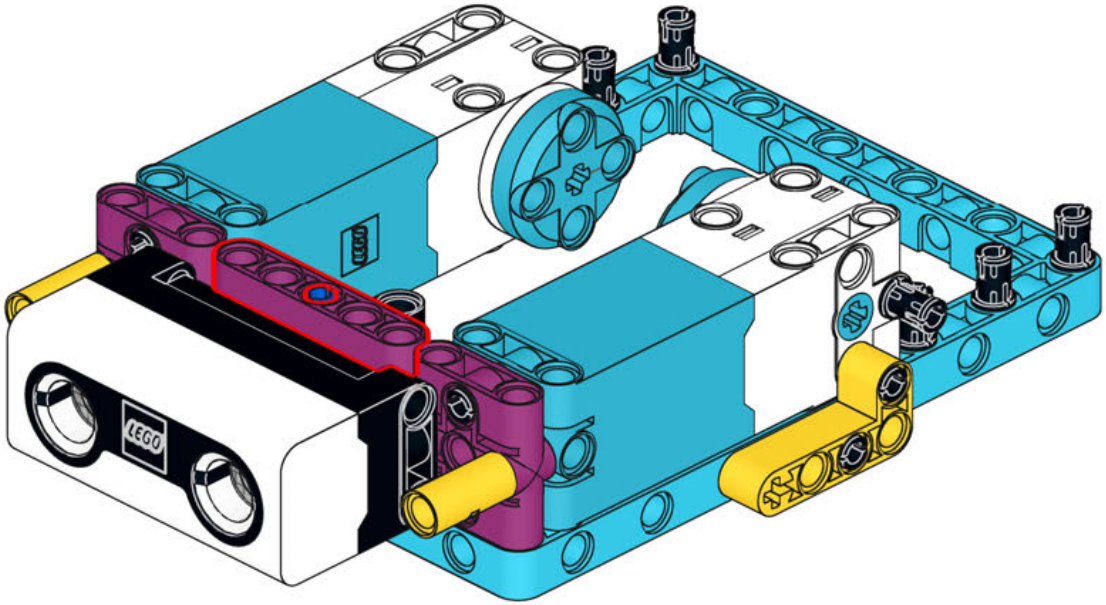

21

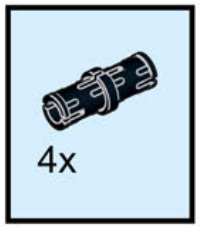

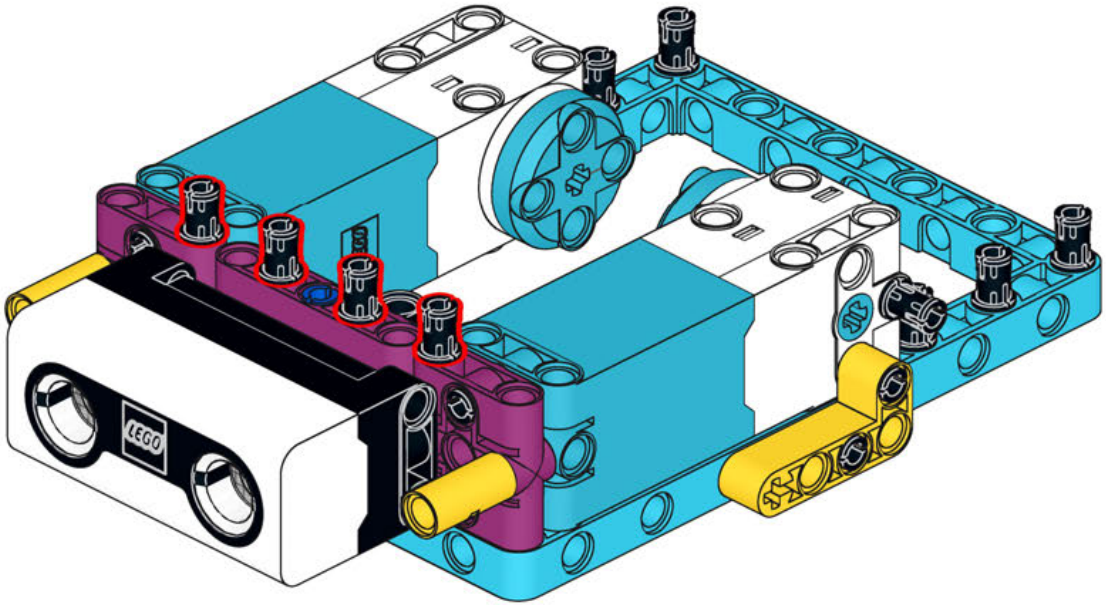

22

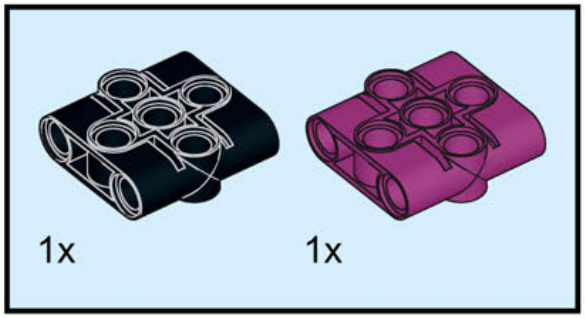

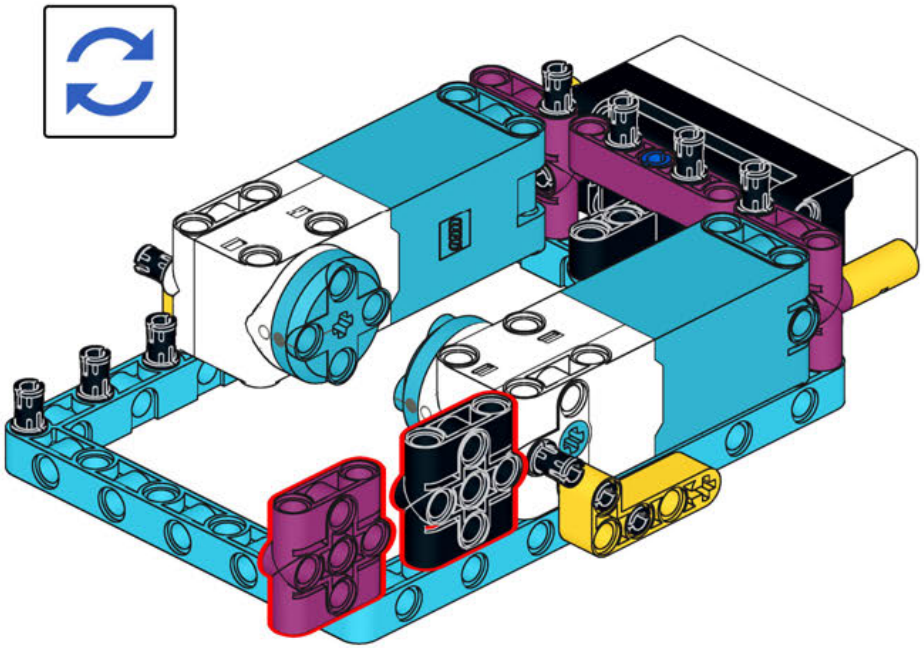

23

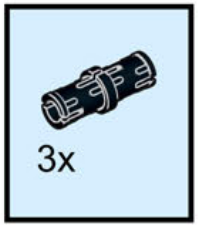

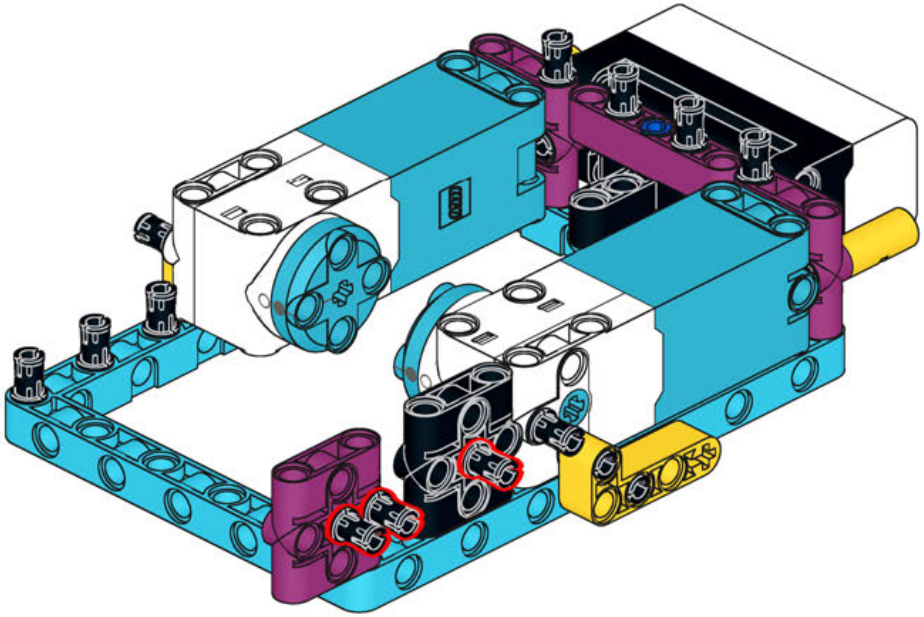

24

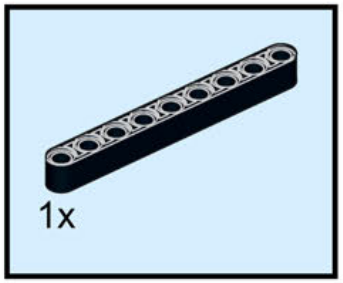

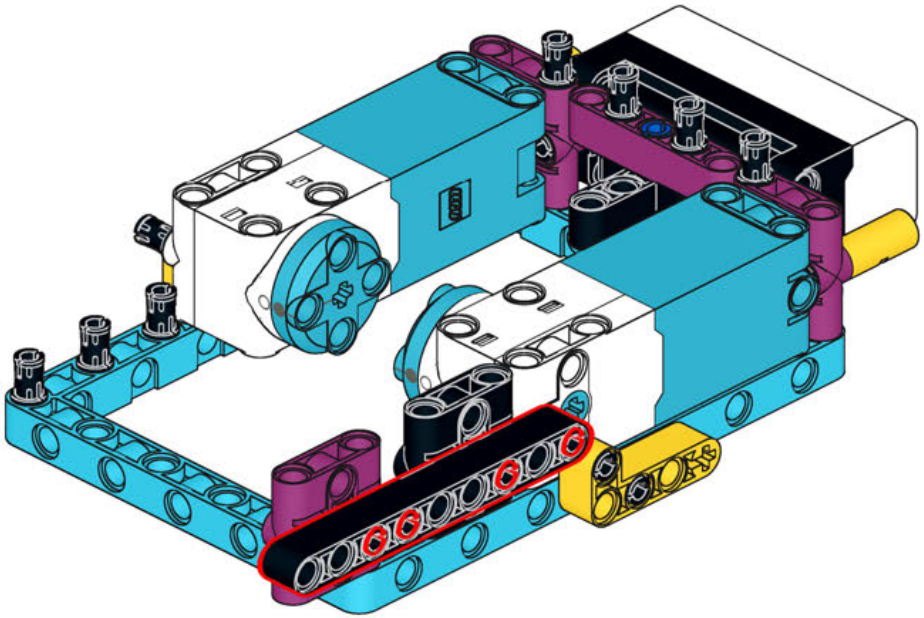

25

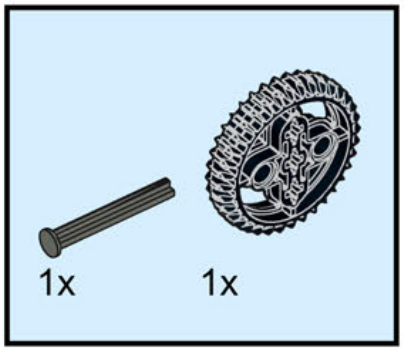

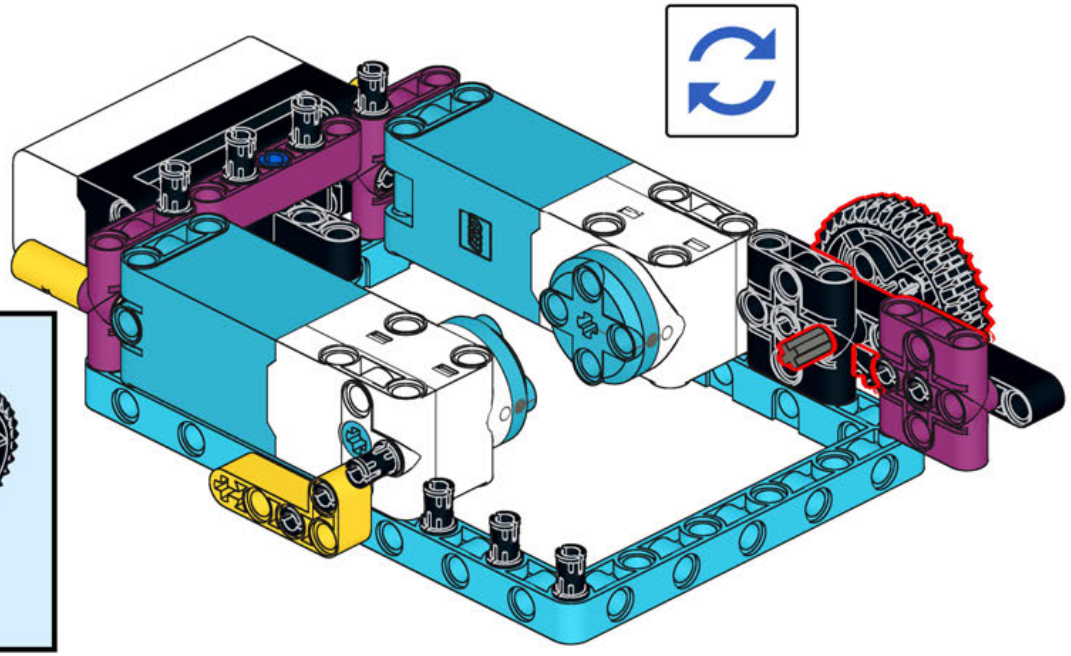

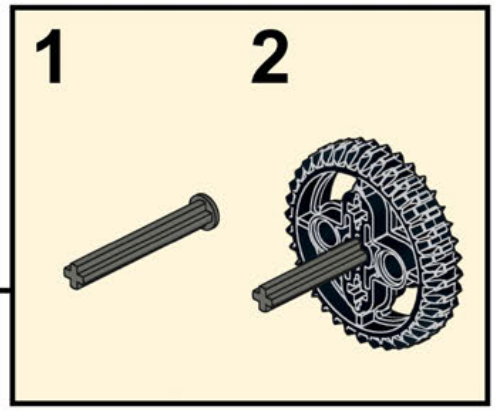

26

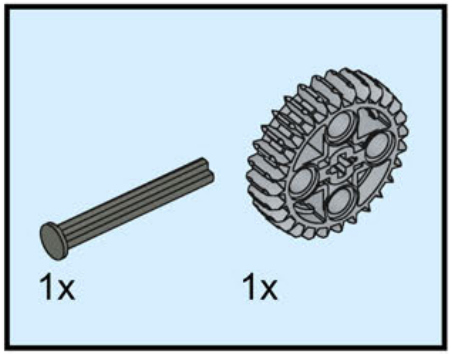

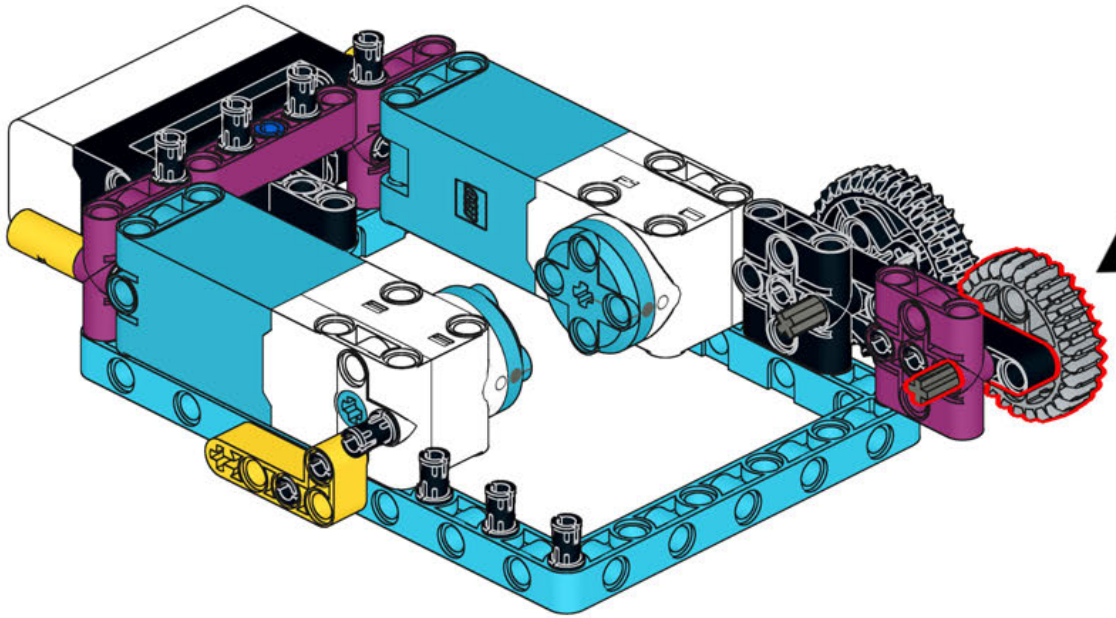

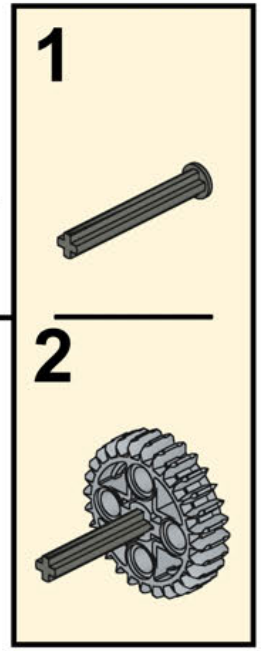

27

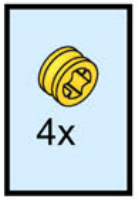

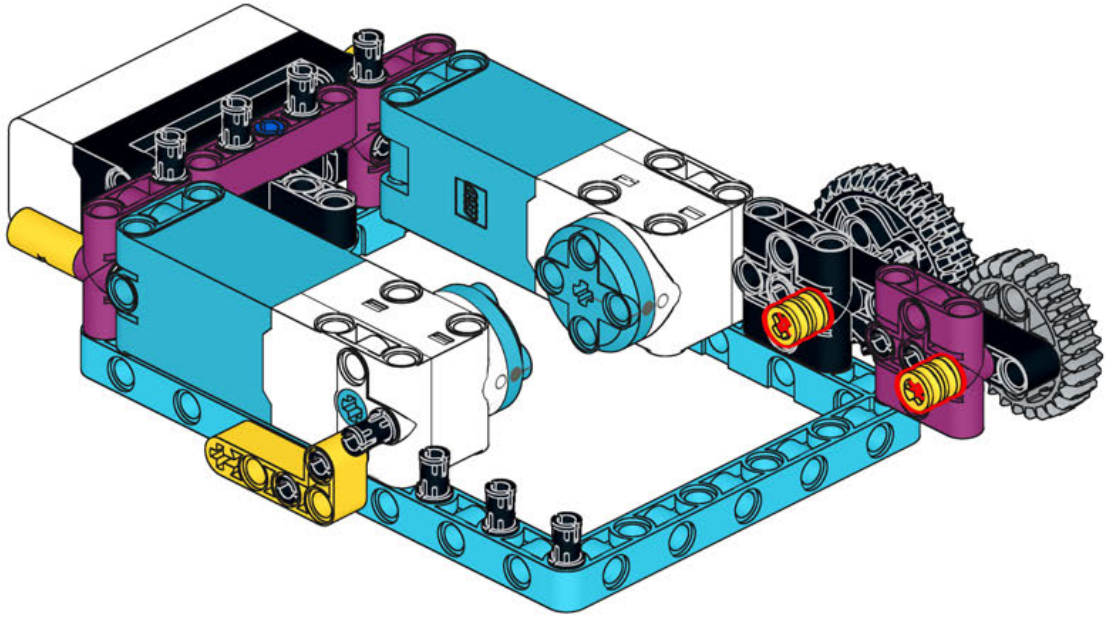

28

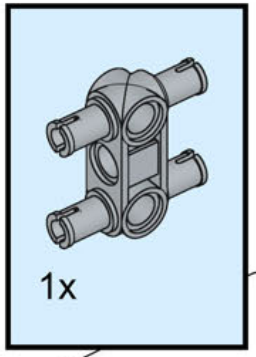

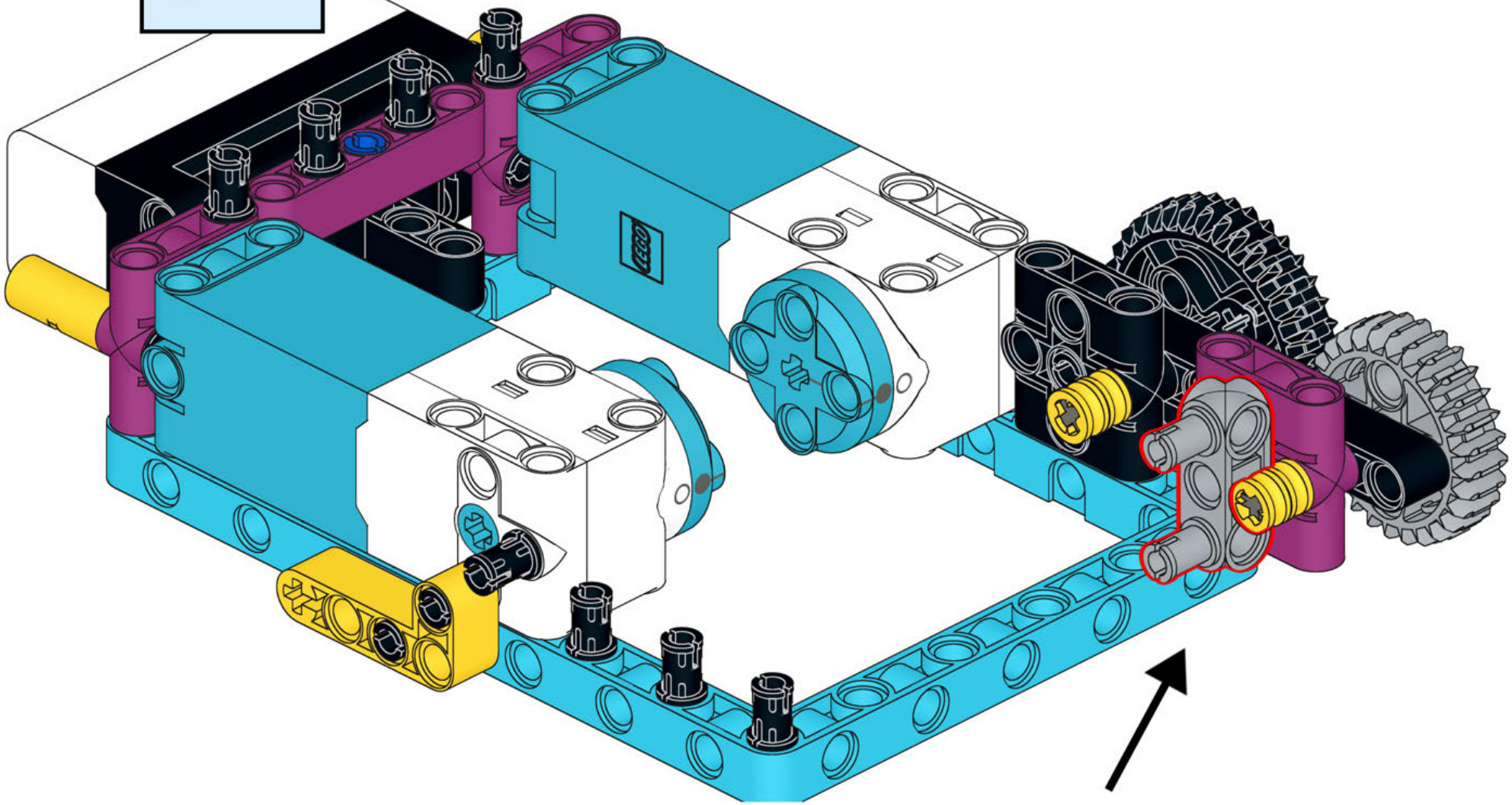

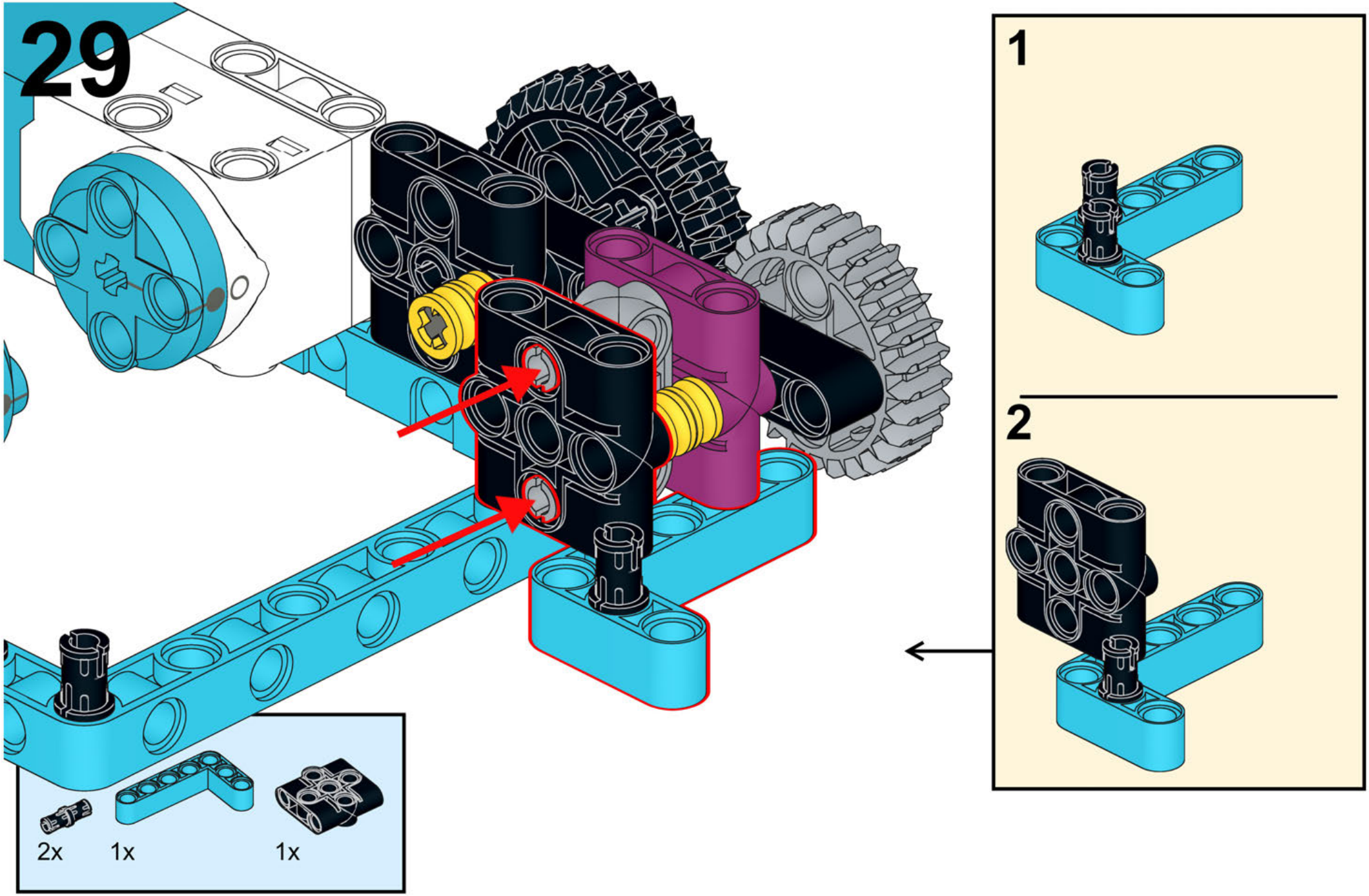
29
1
2
2x
1x
1x

30

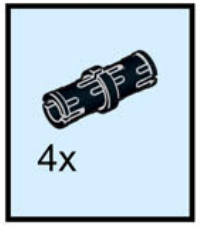

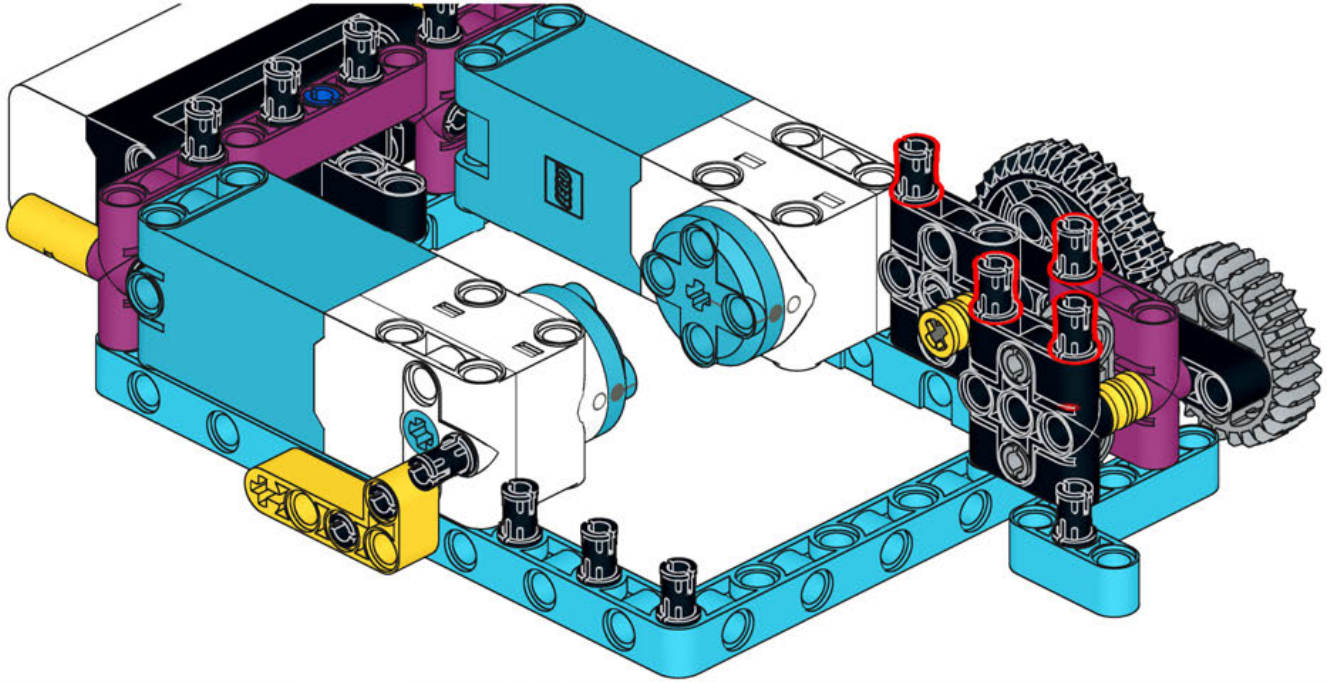

31

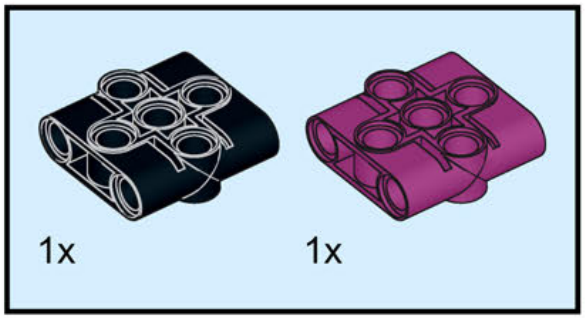

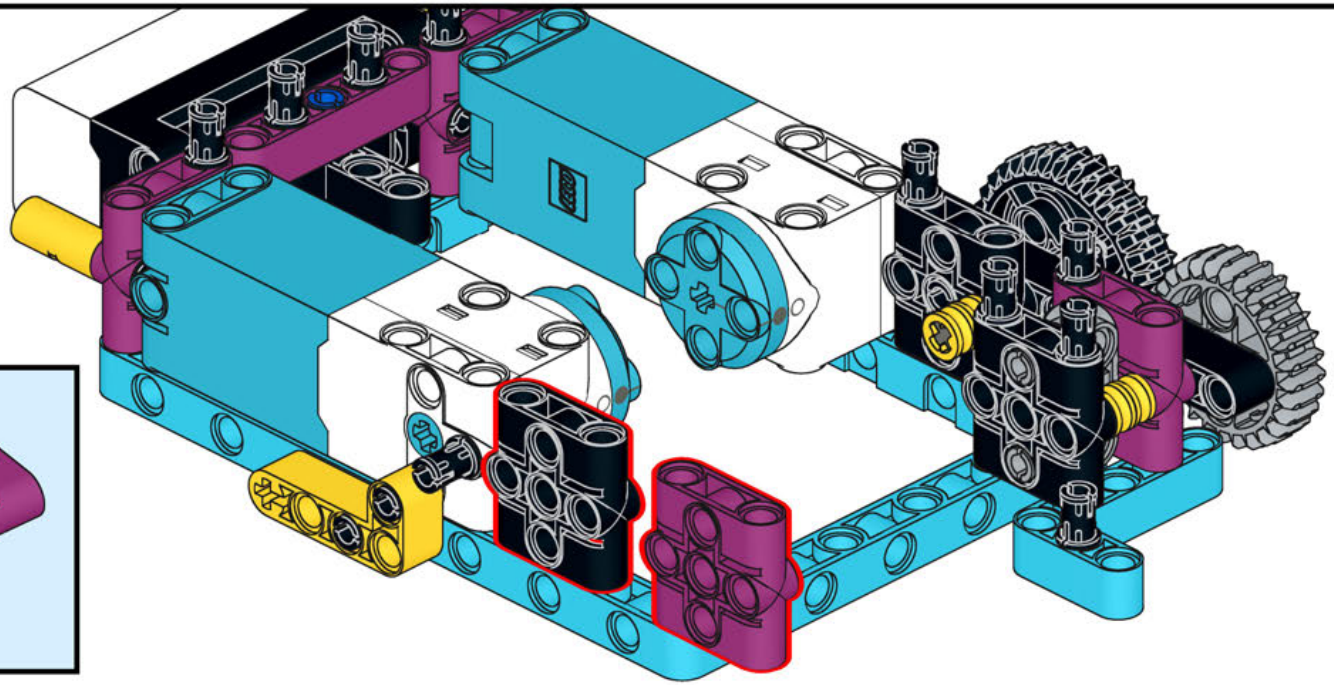

32

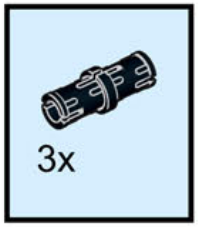

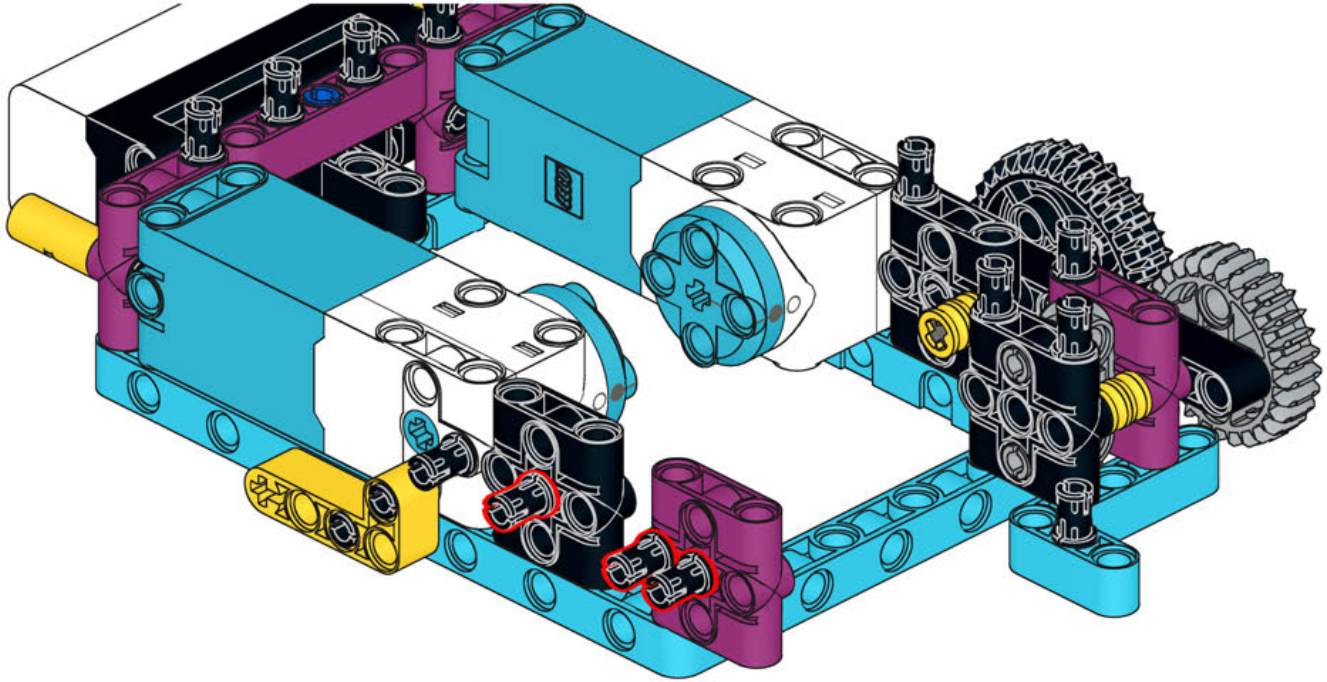

33

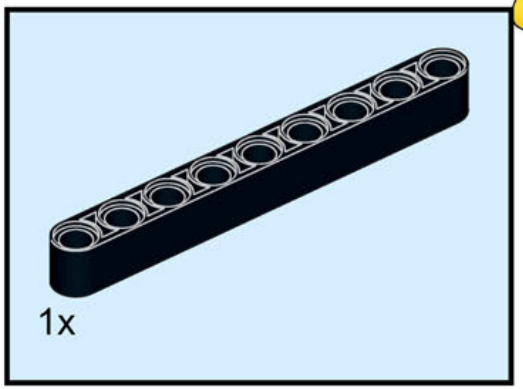

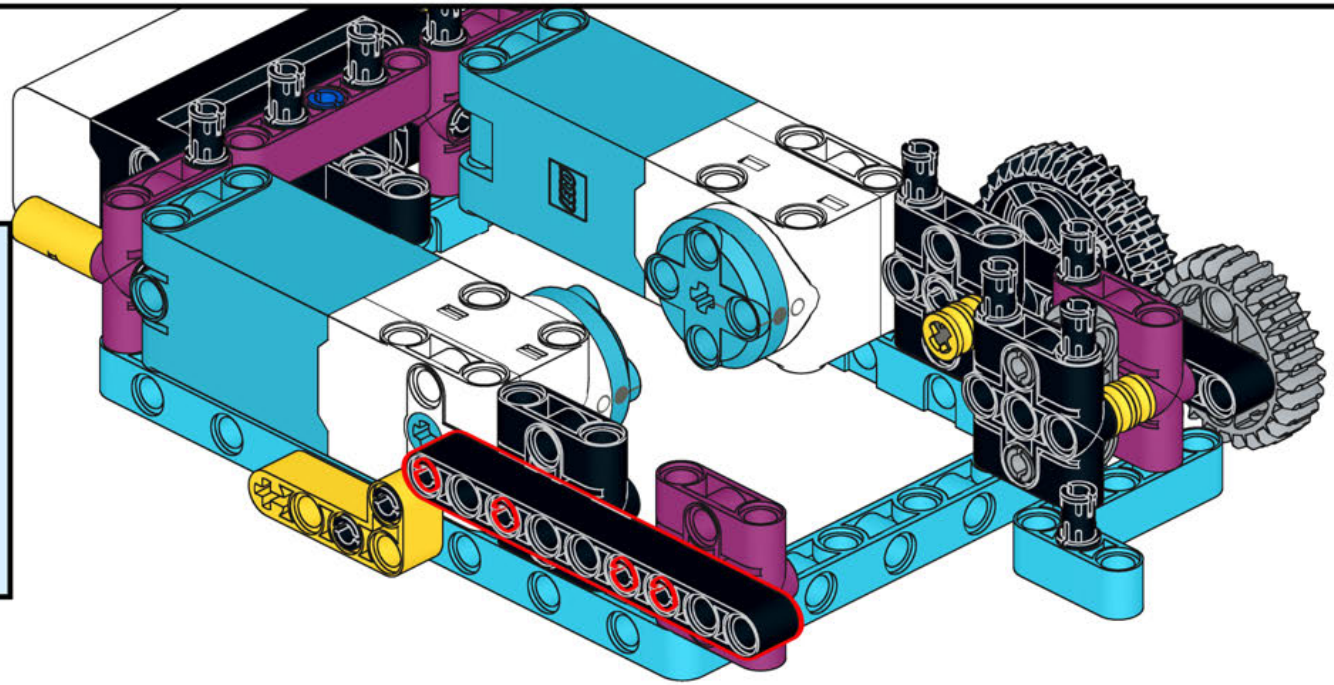

34

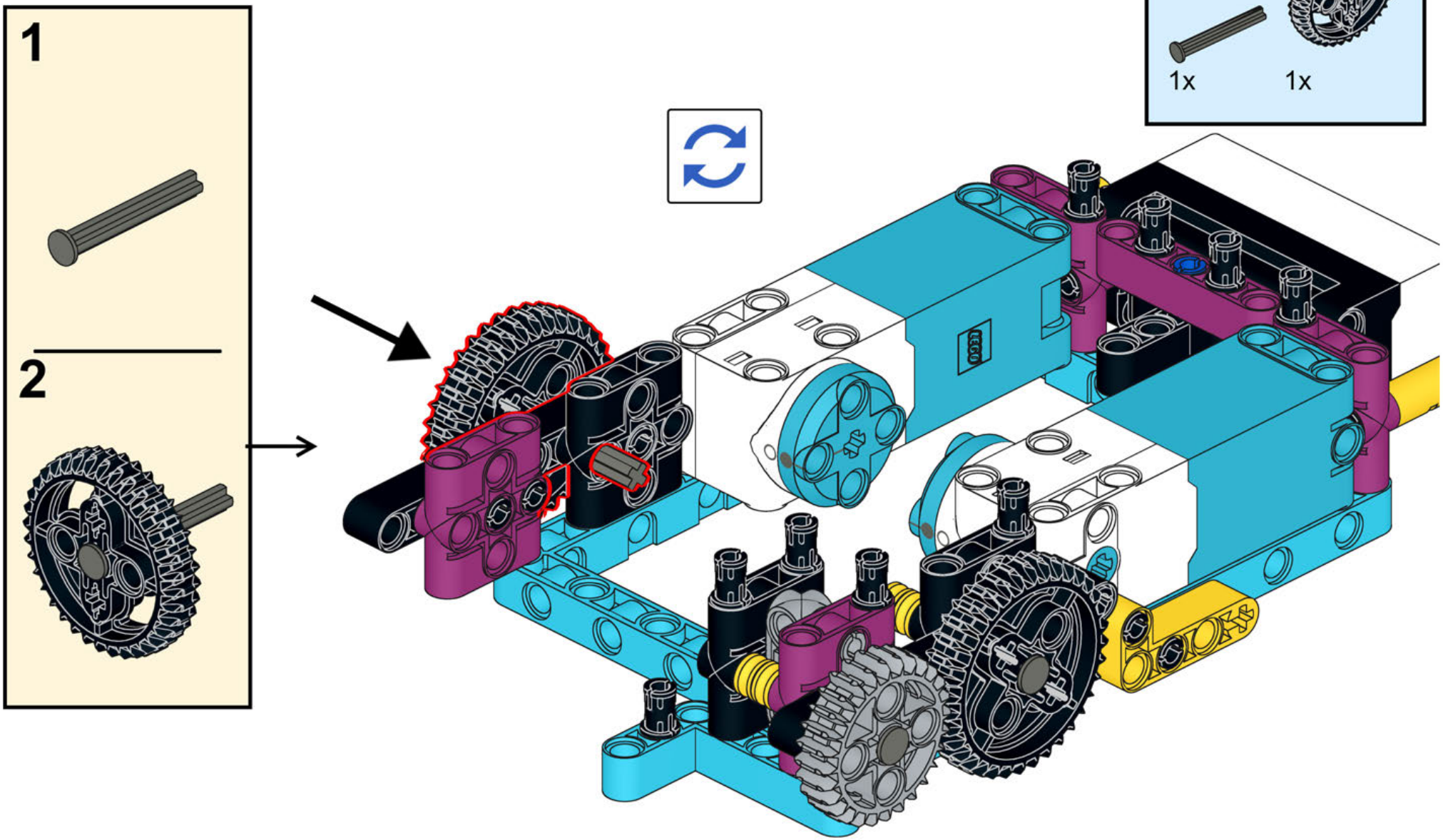

35

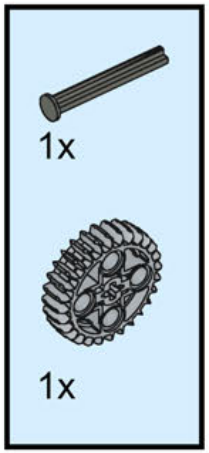

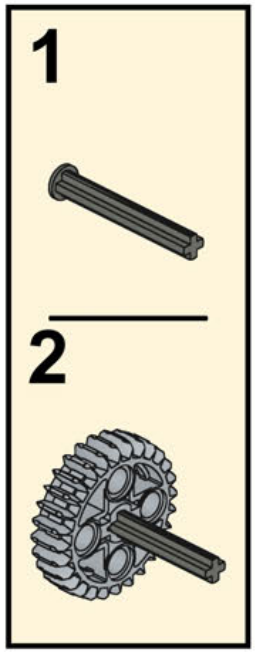

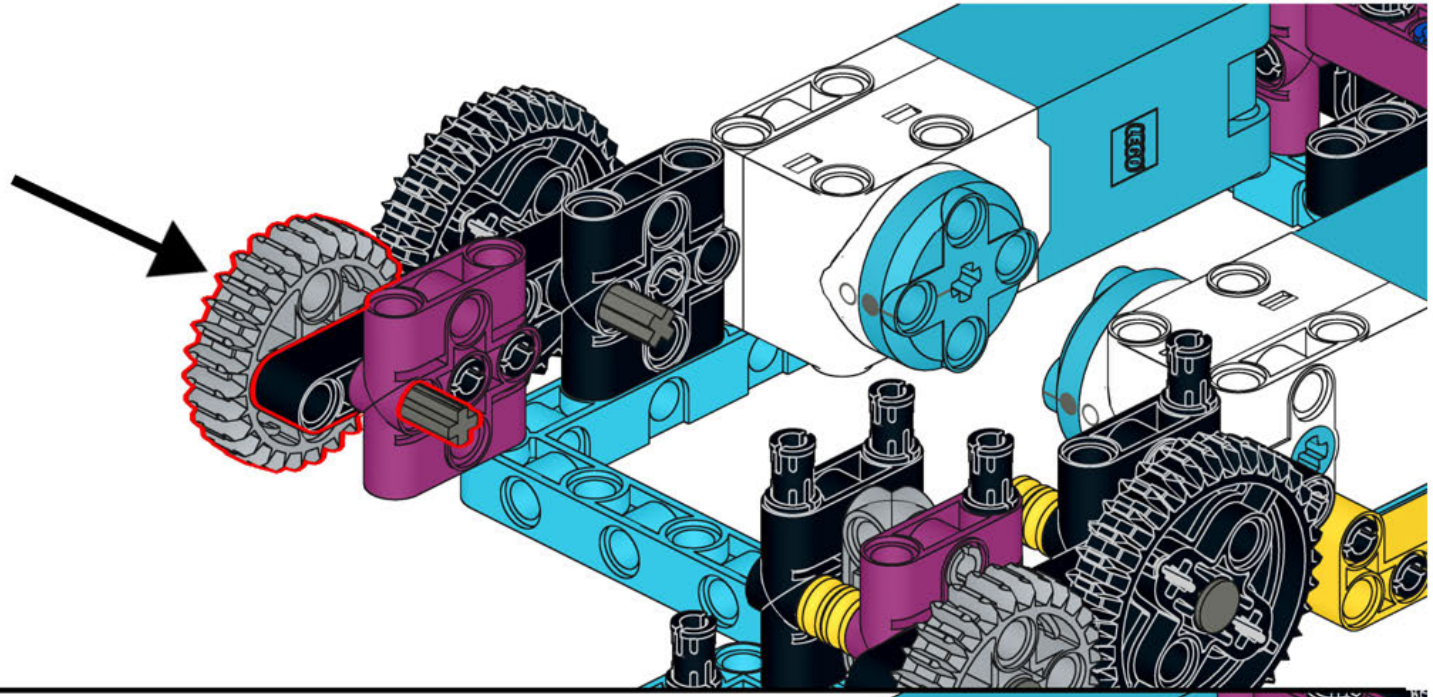

36

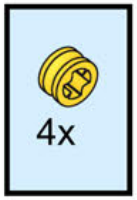

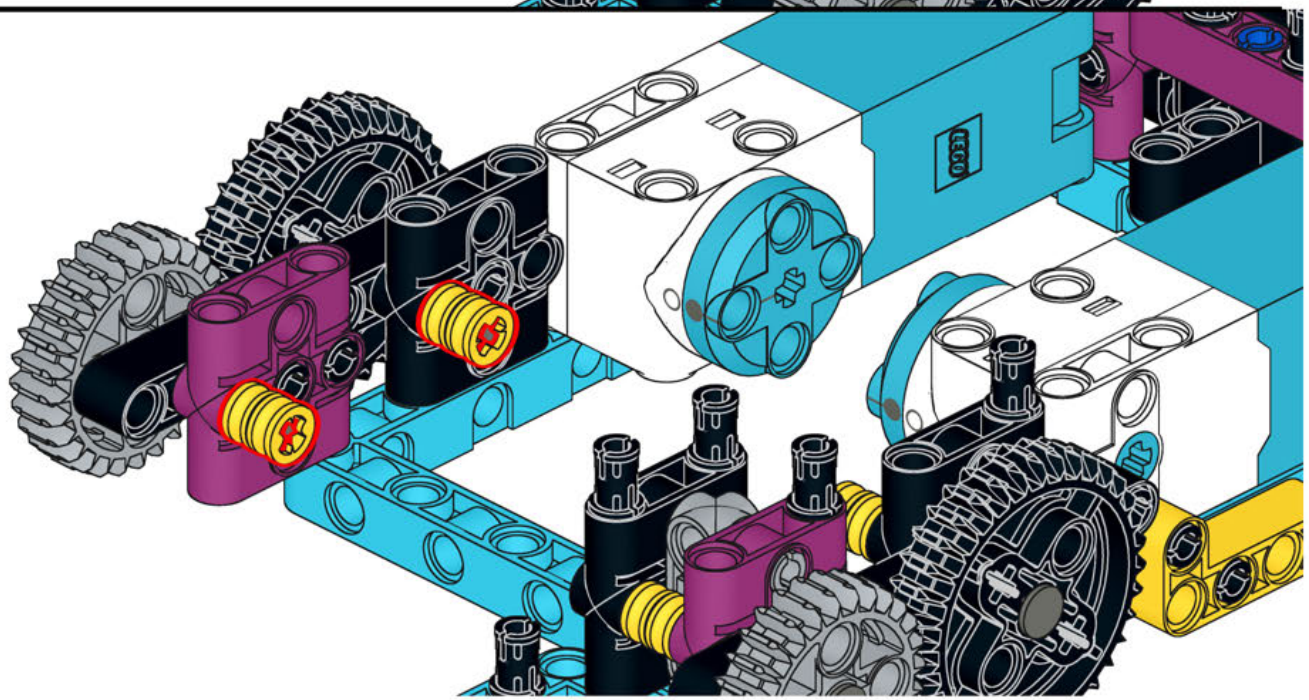

37

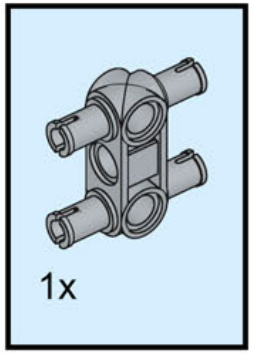

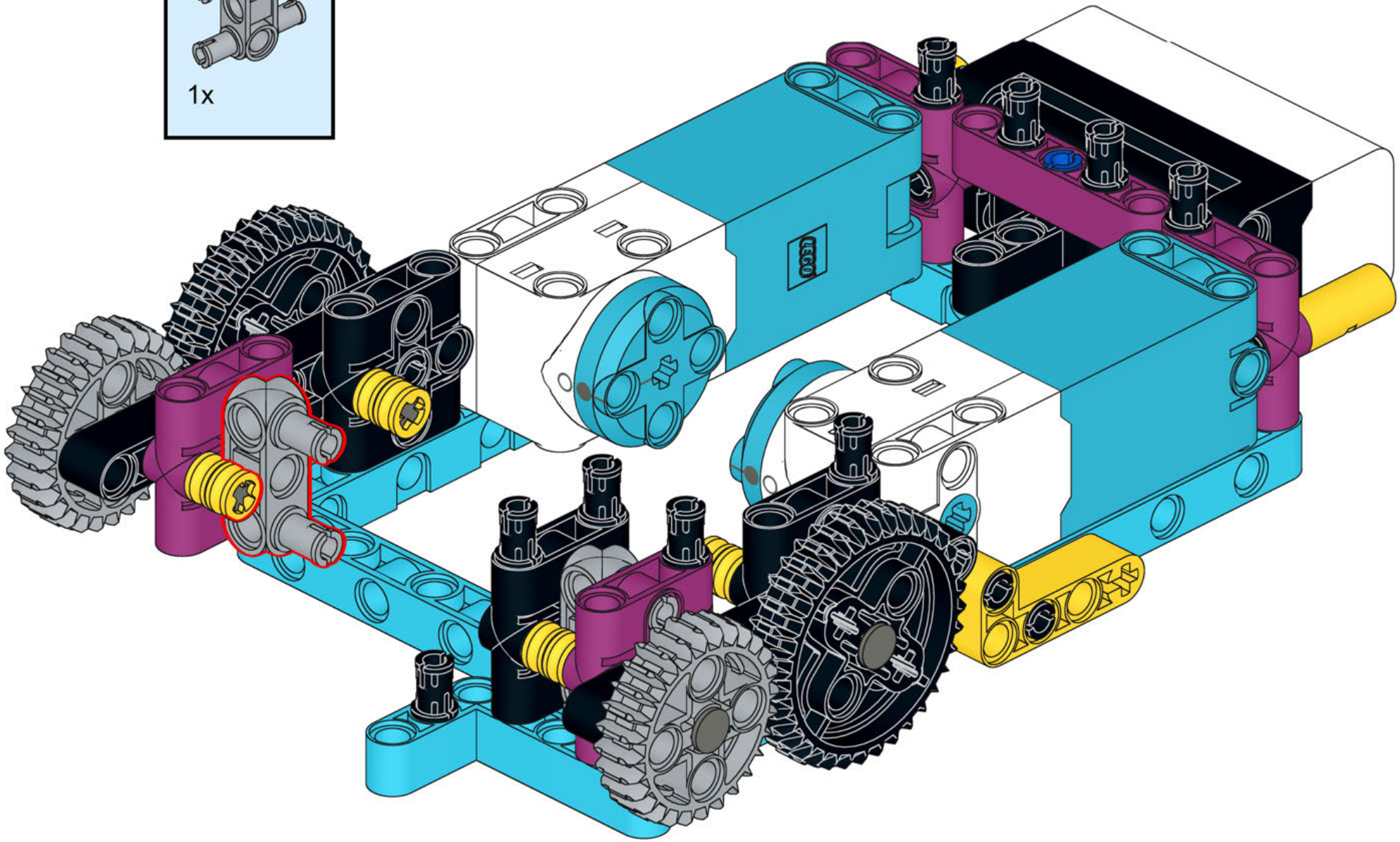

38

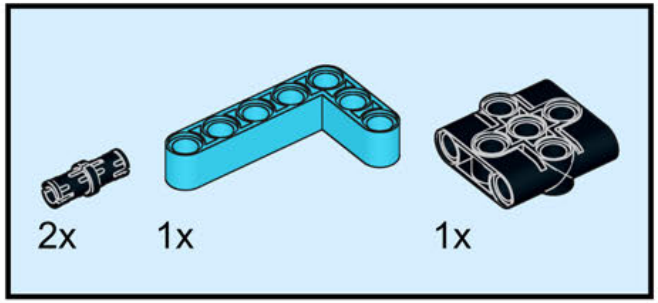

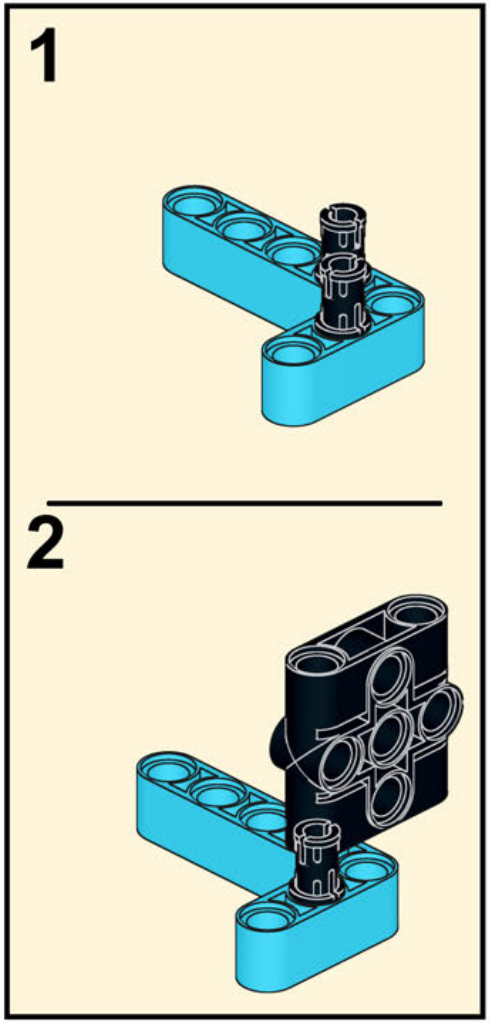

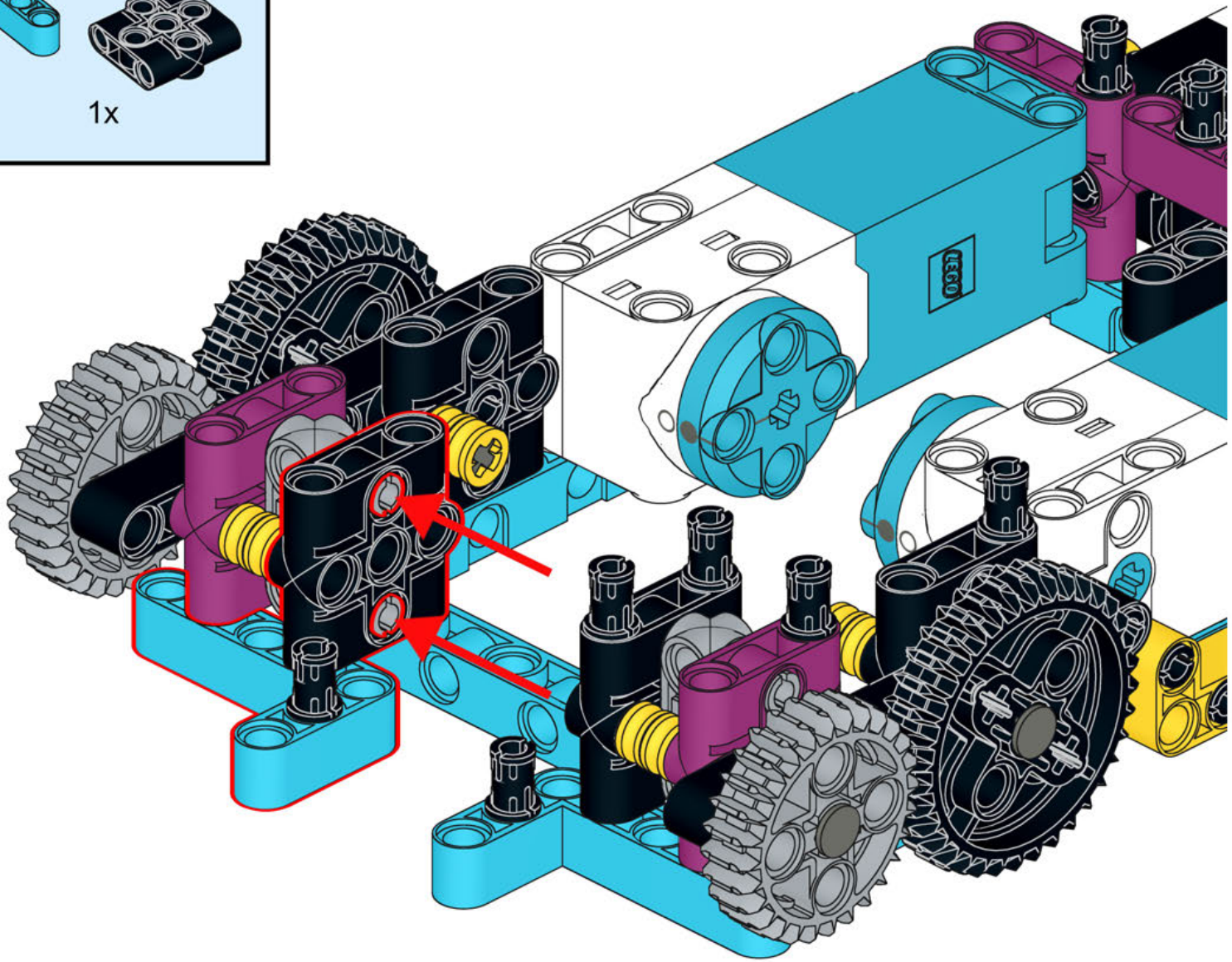

39

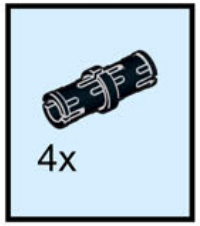

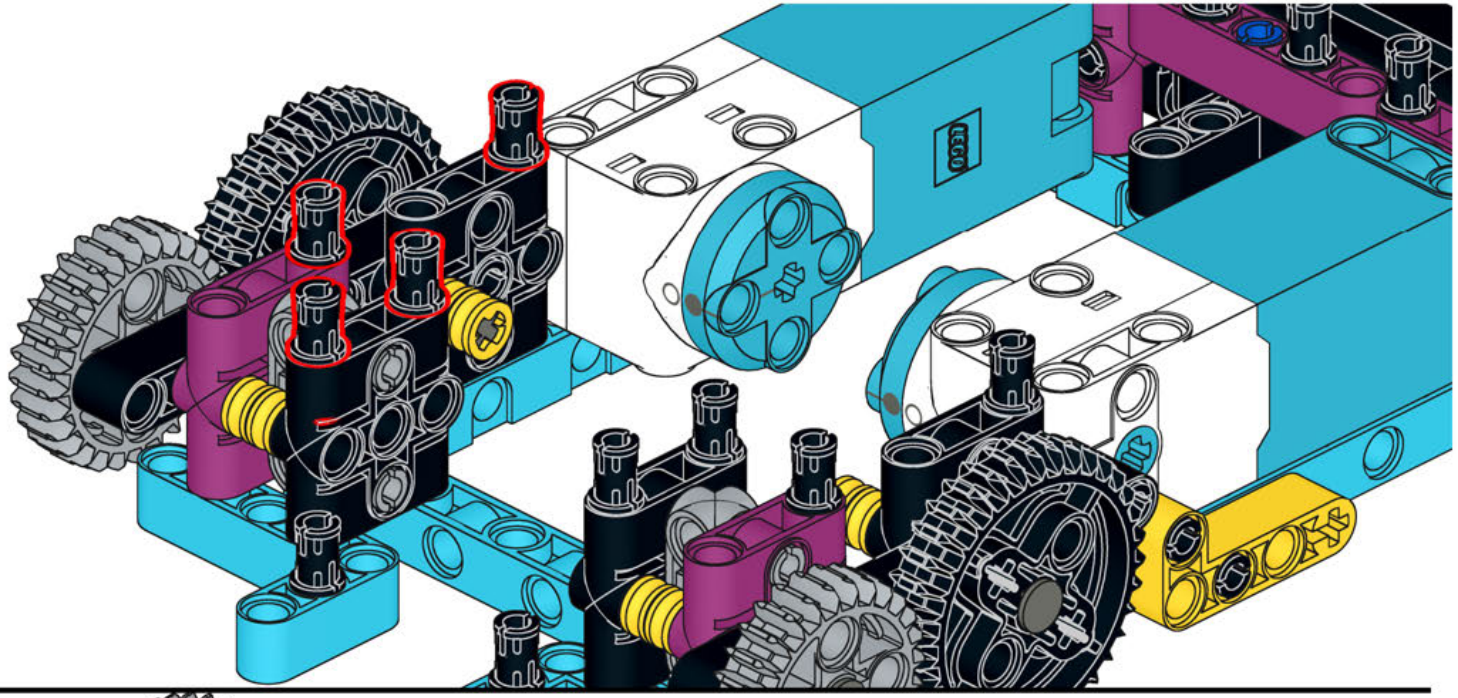

40

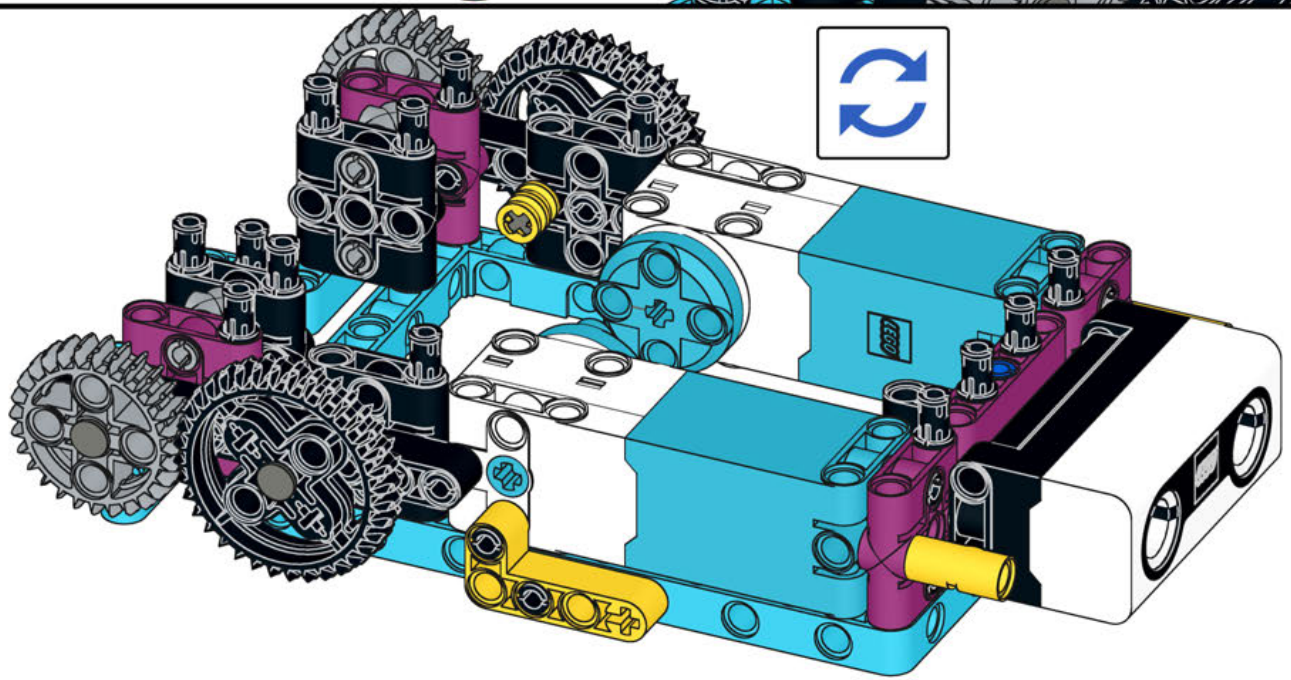

41

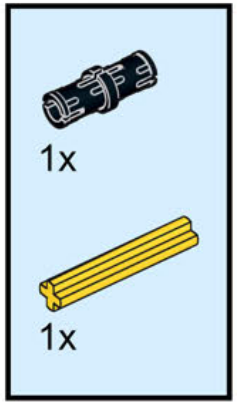

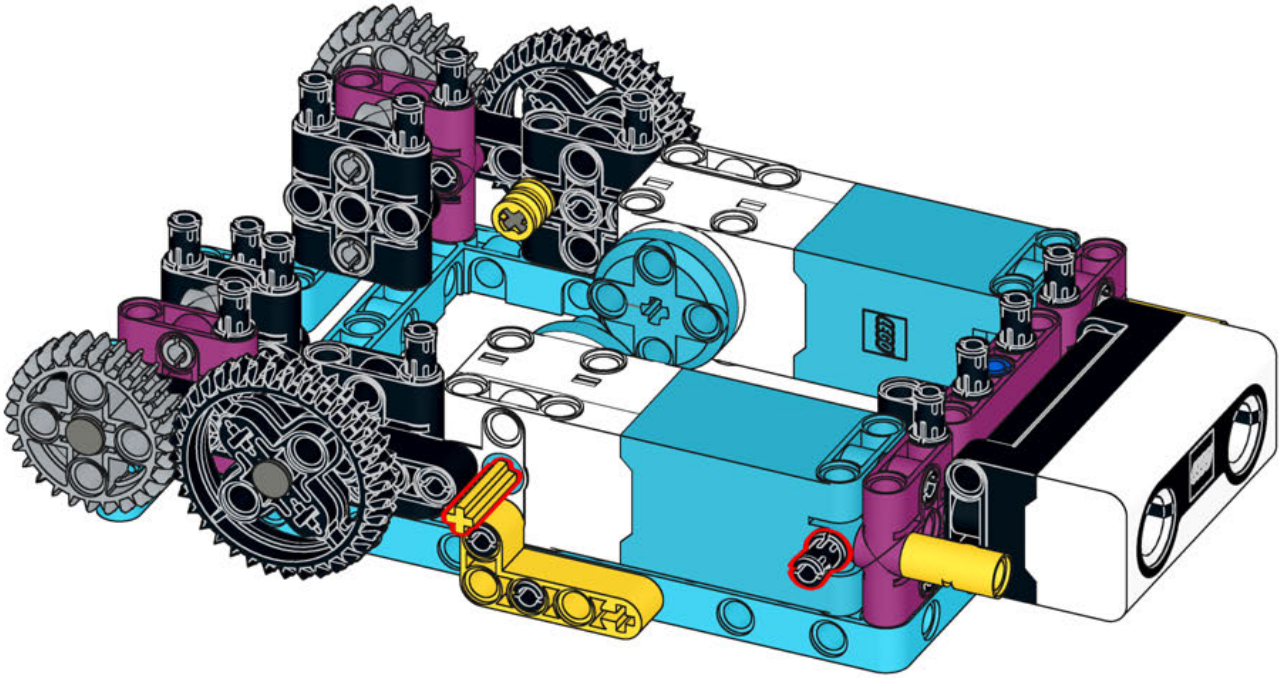

42

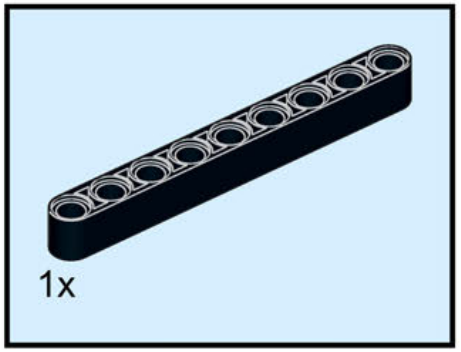

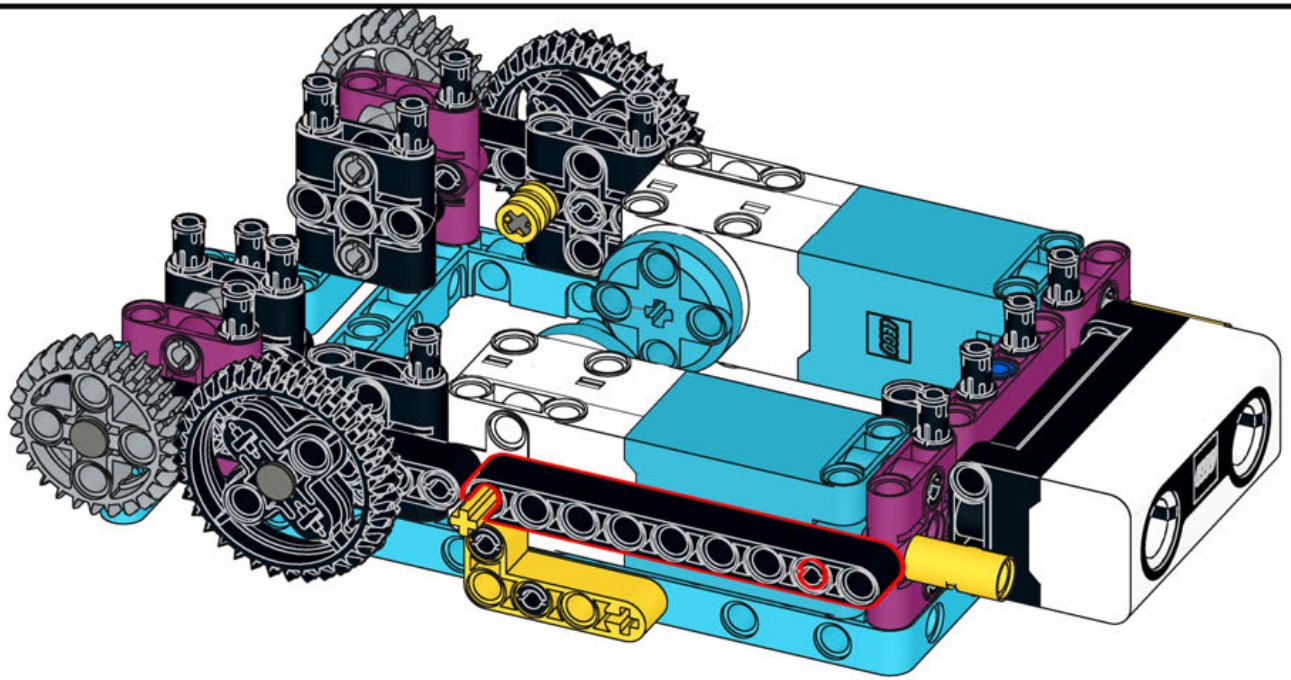

43

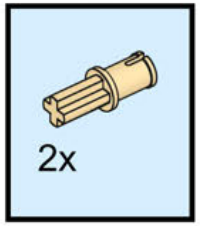

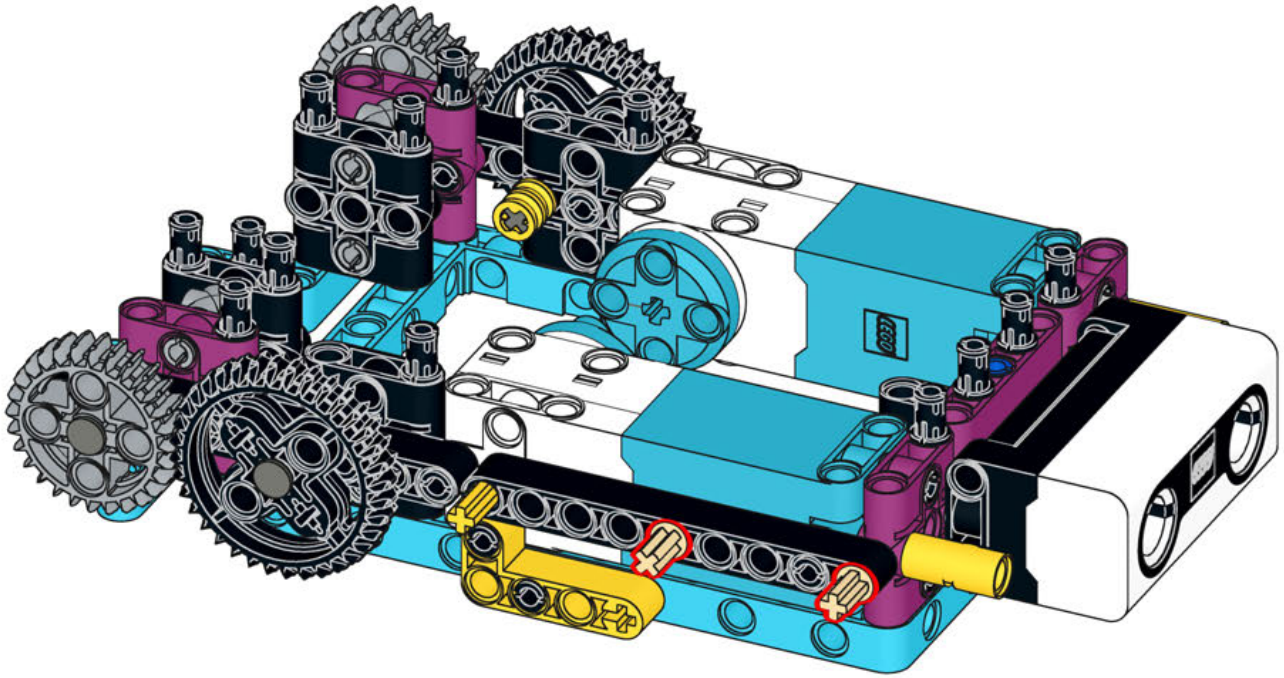

44

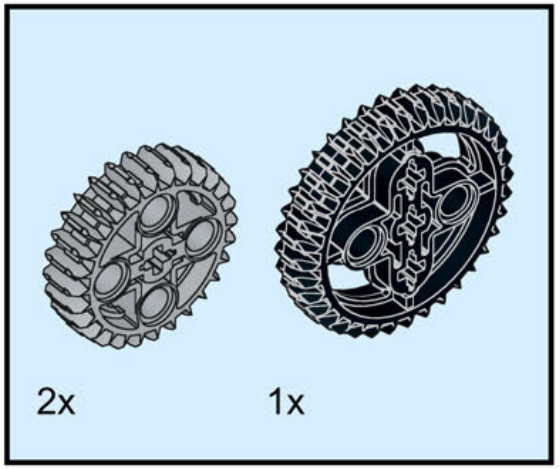

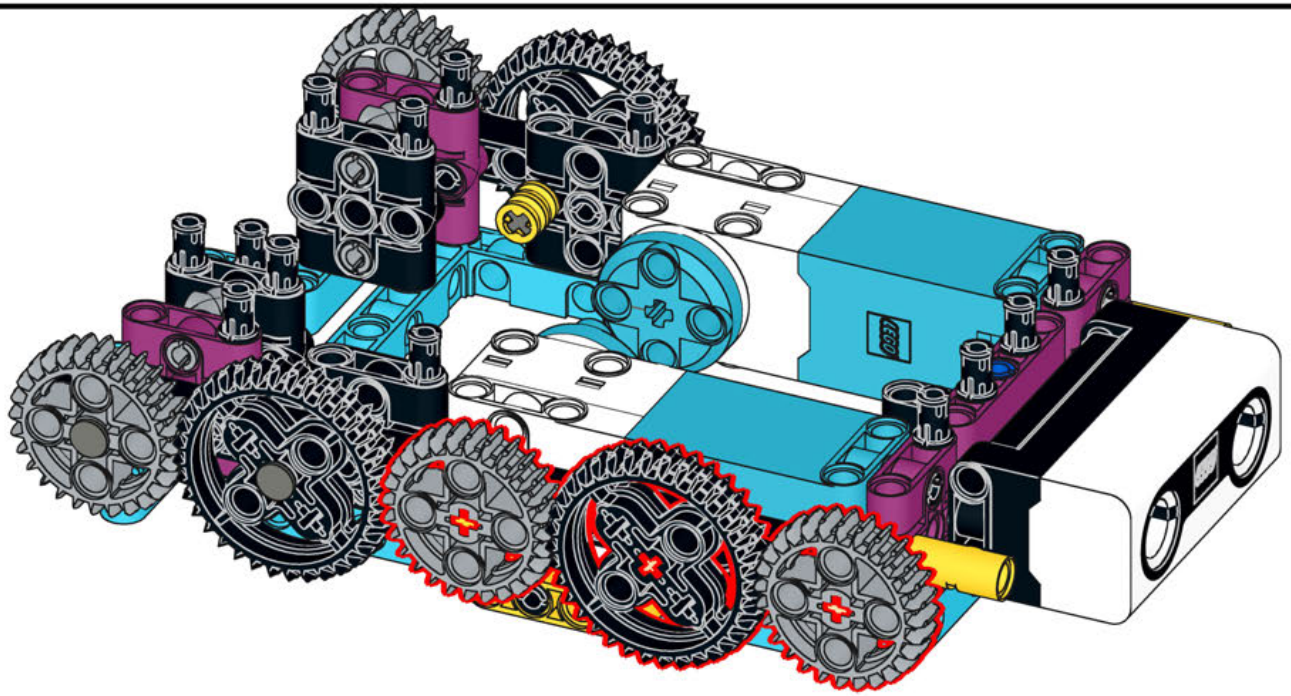

45

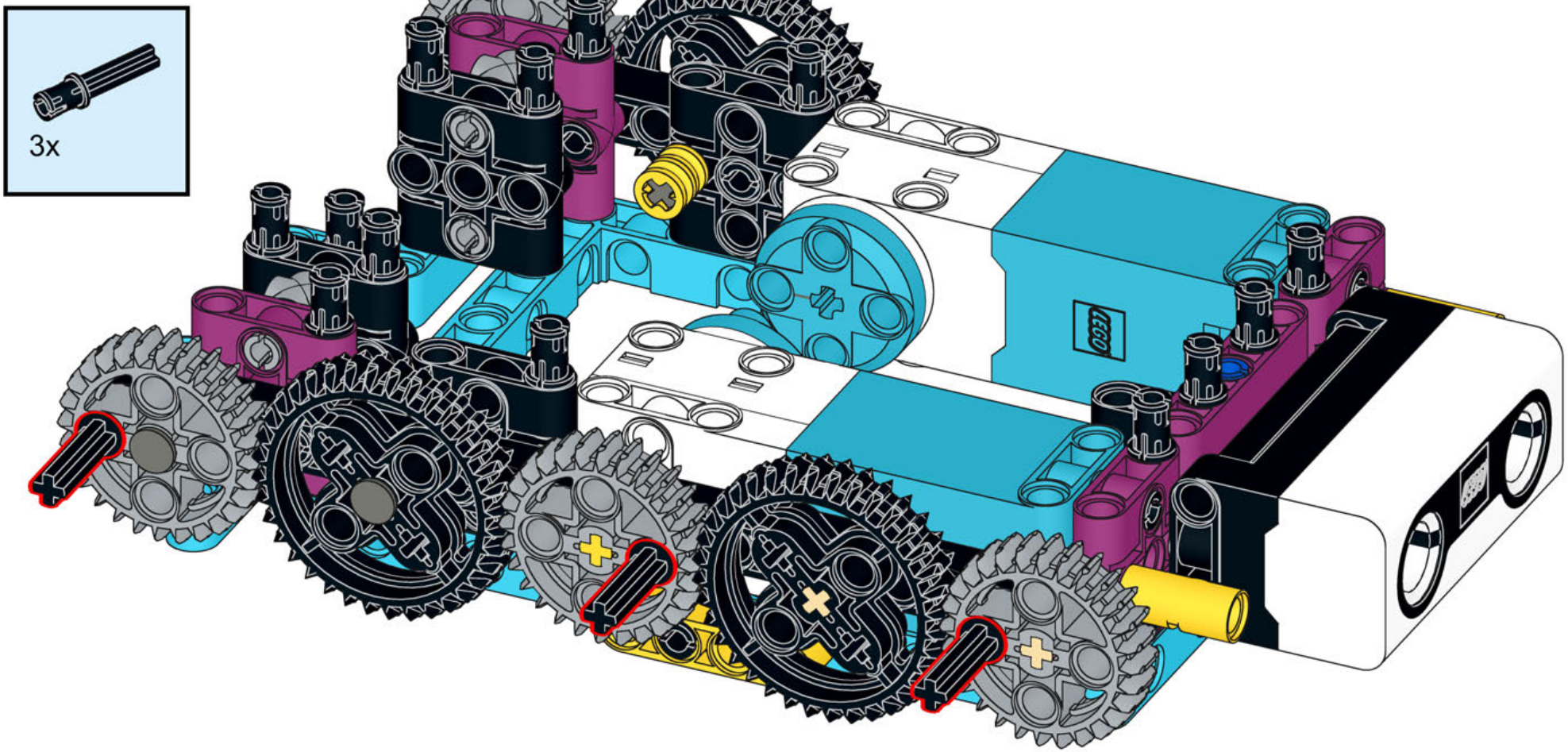

Attention: Make sure that the motors are in their zero position and the 3 pins and their gears are aligned in the shown position!

46

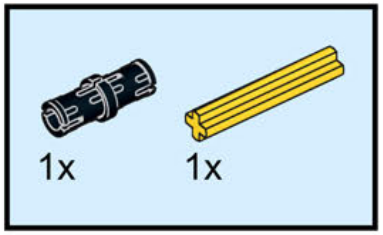

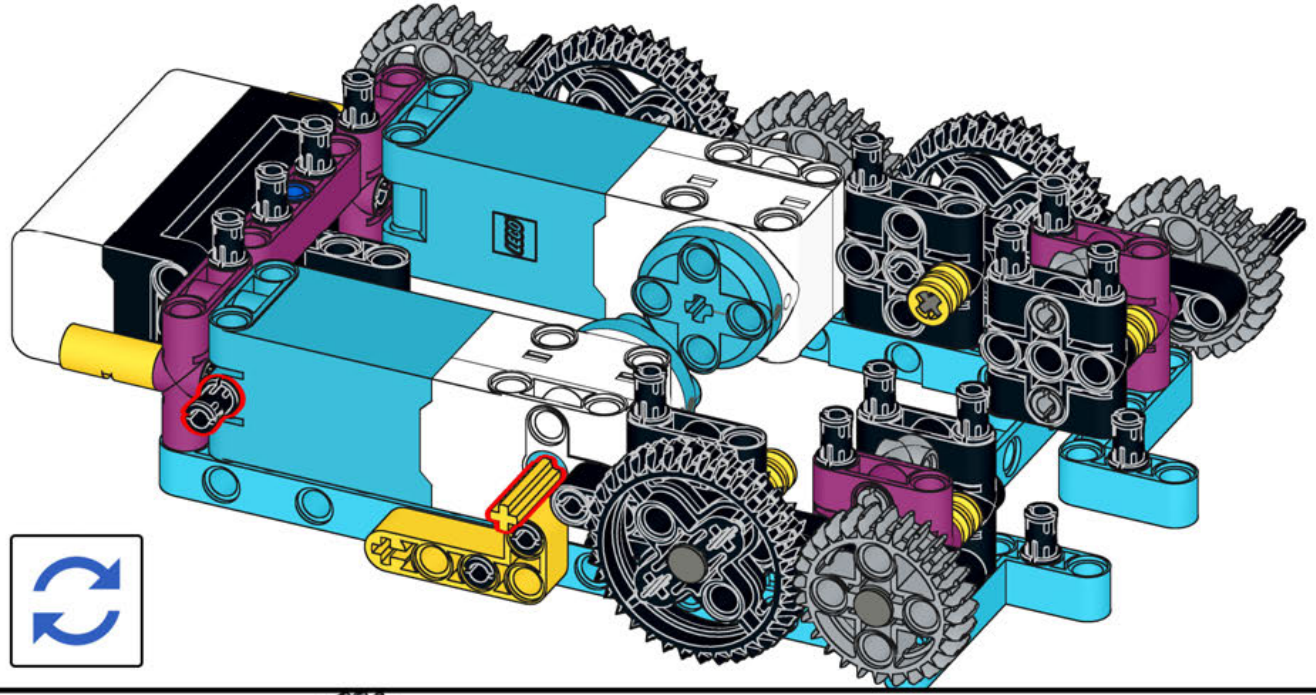

47

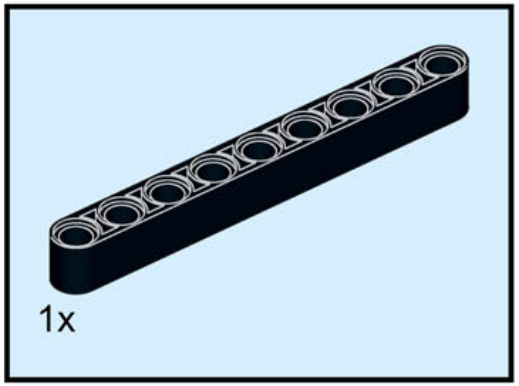

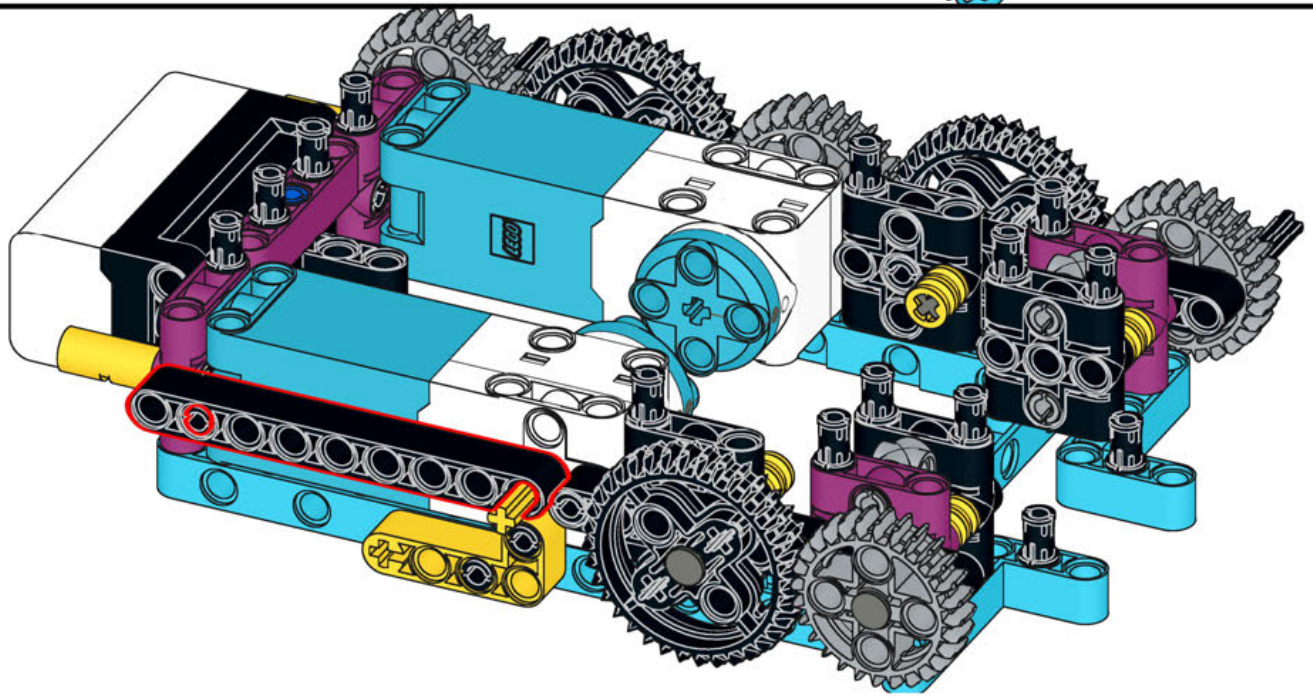

48

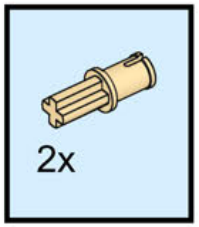

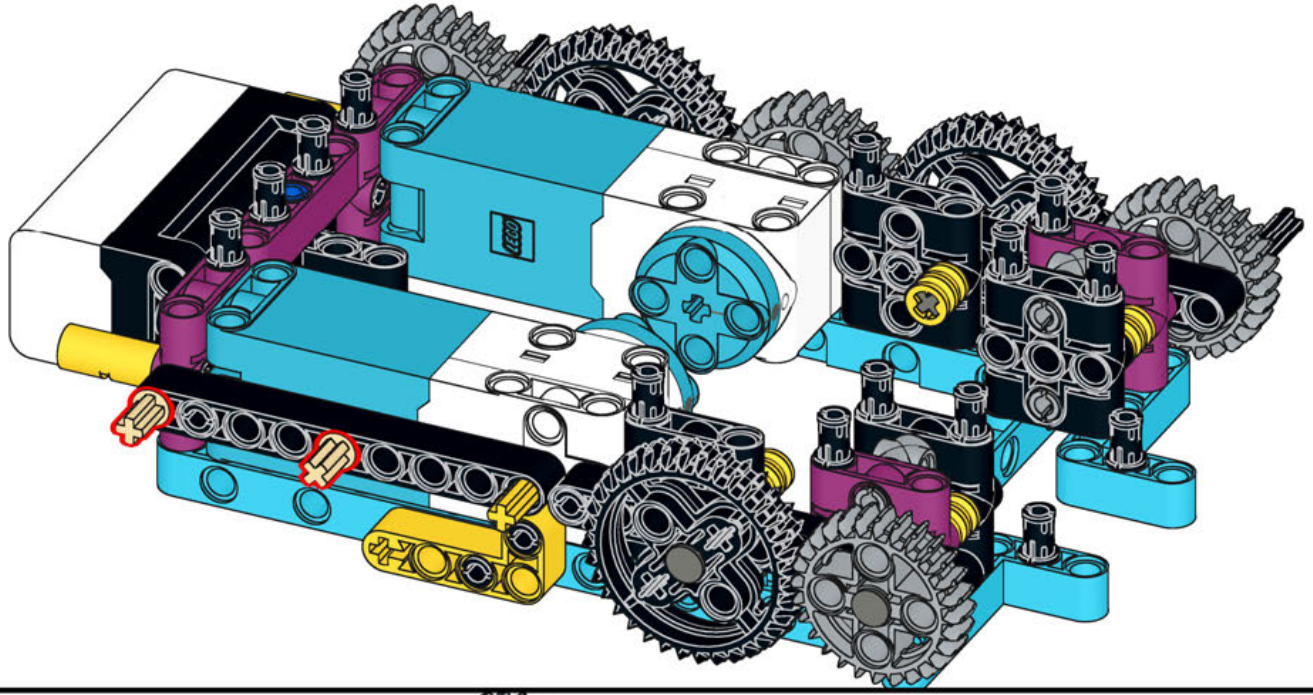

49

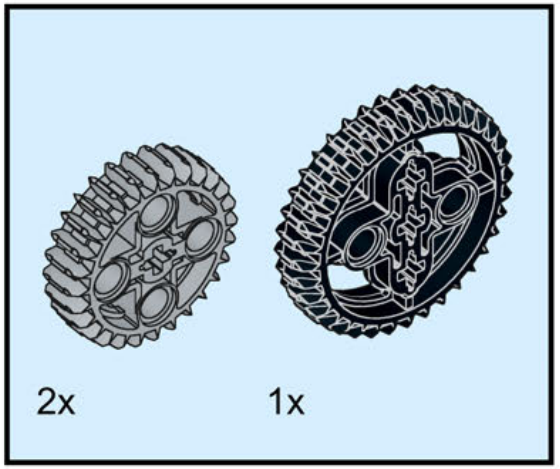

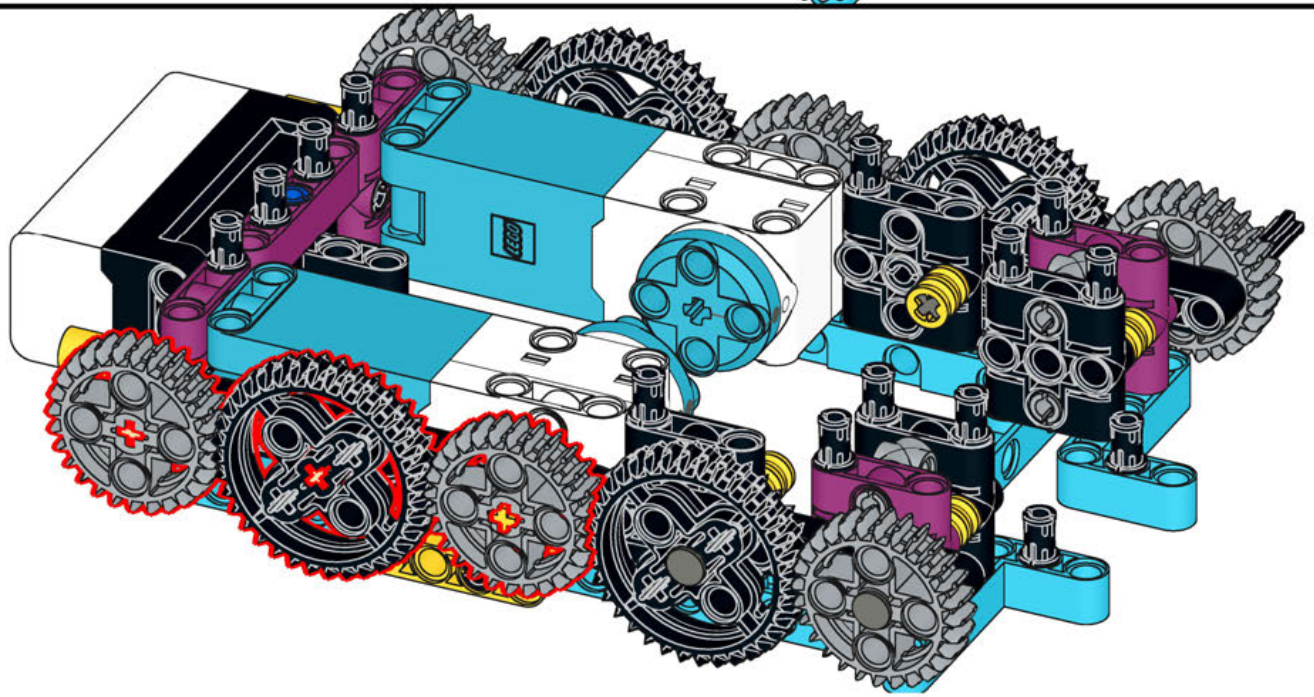

50

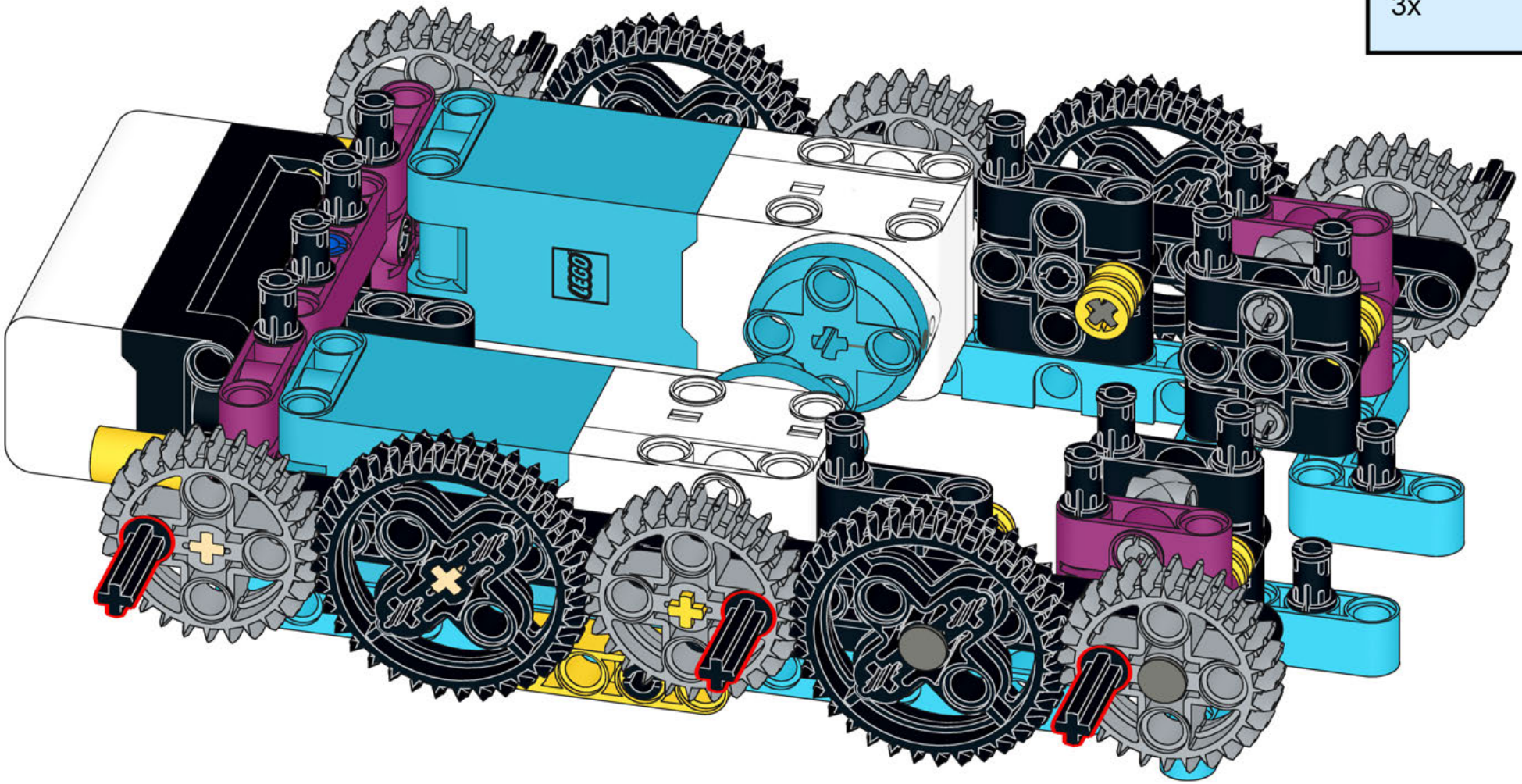

Attention: Make sure that the motors are in their zero position and the 3 pins and their gears are aligned in the shown position!

51

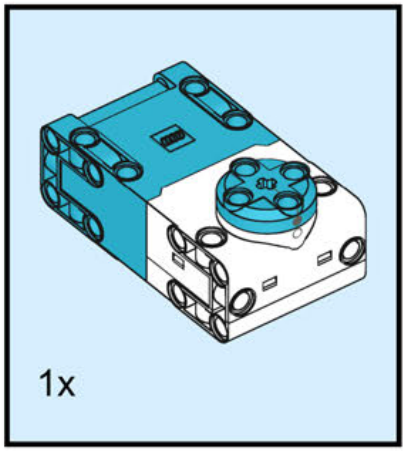

Rotate motor to zero position!

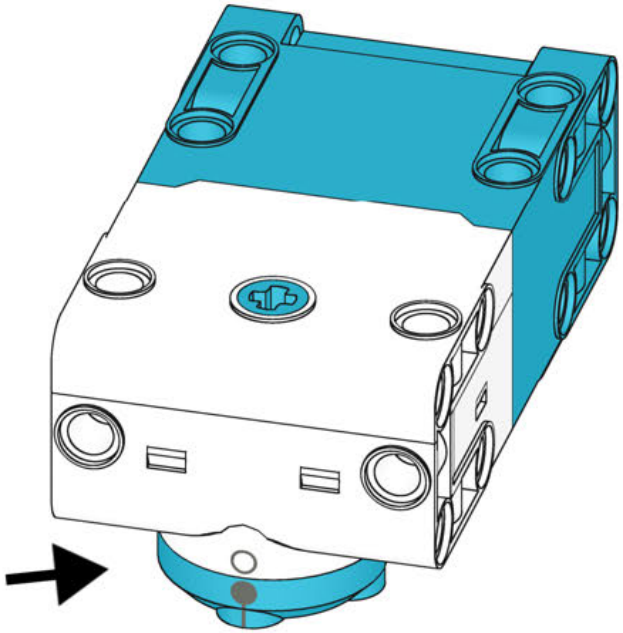

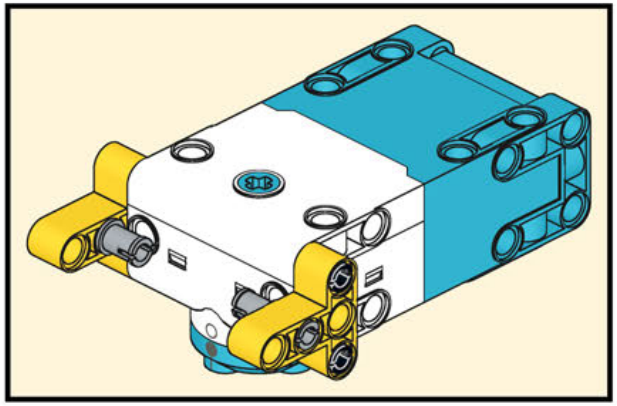

52

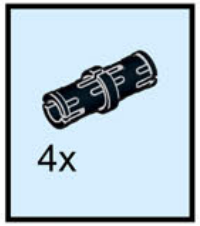

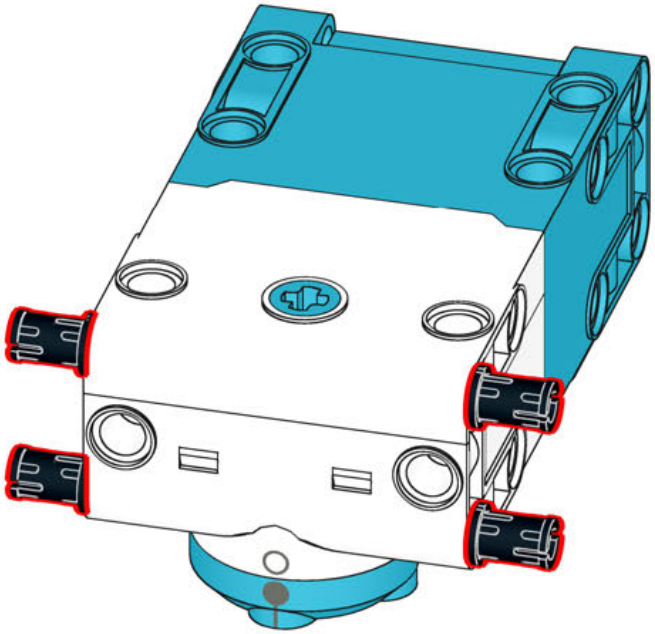

53

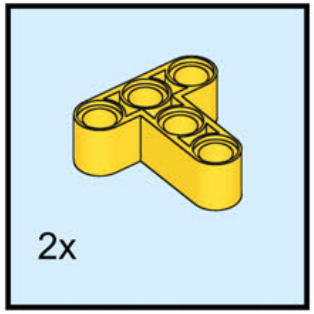

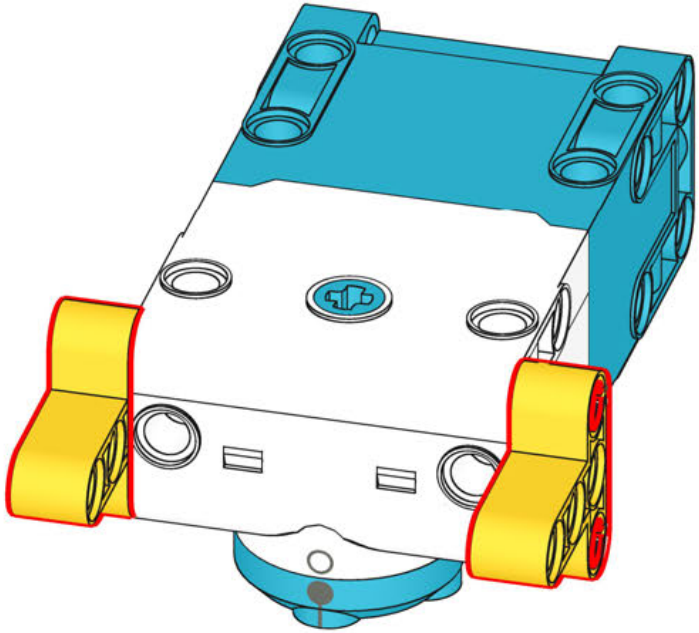

54

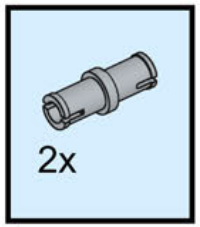

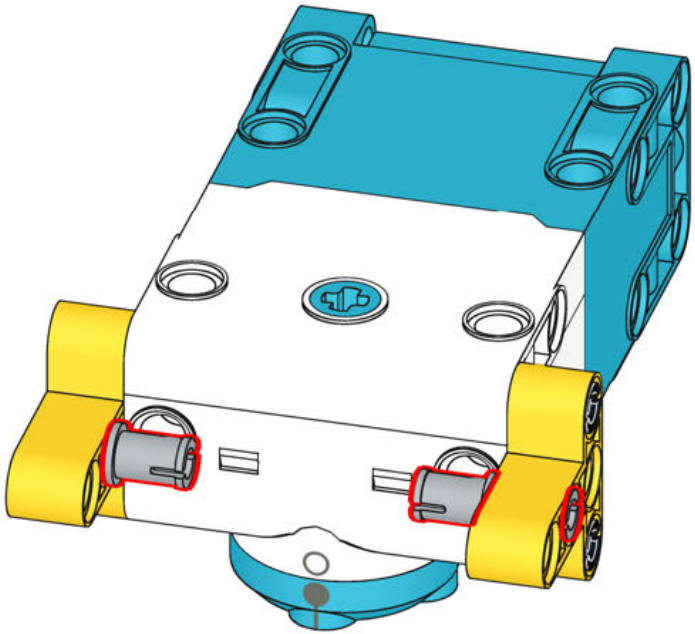

55

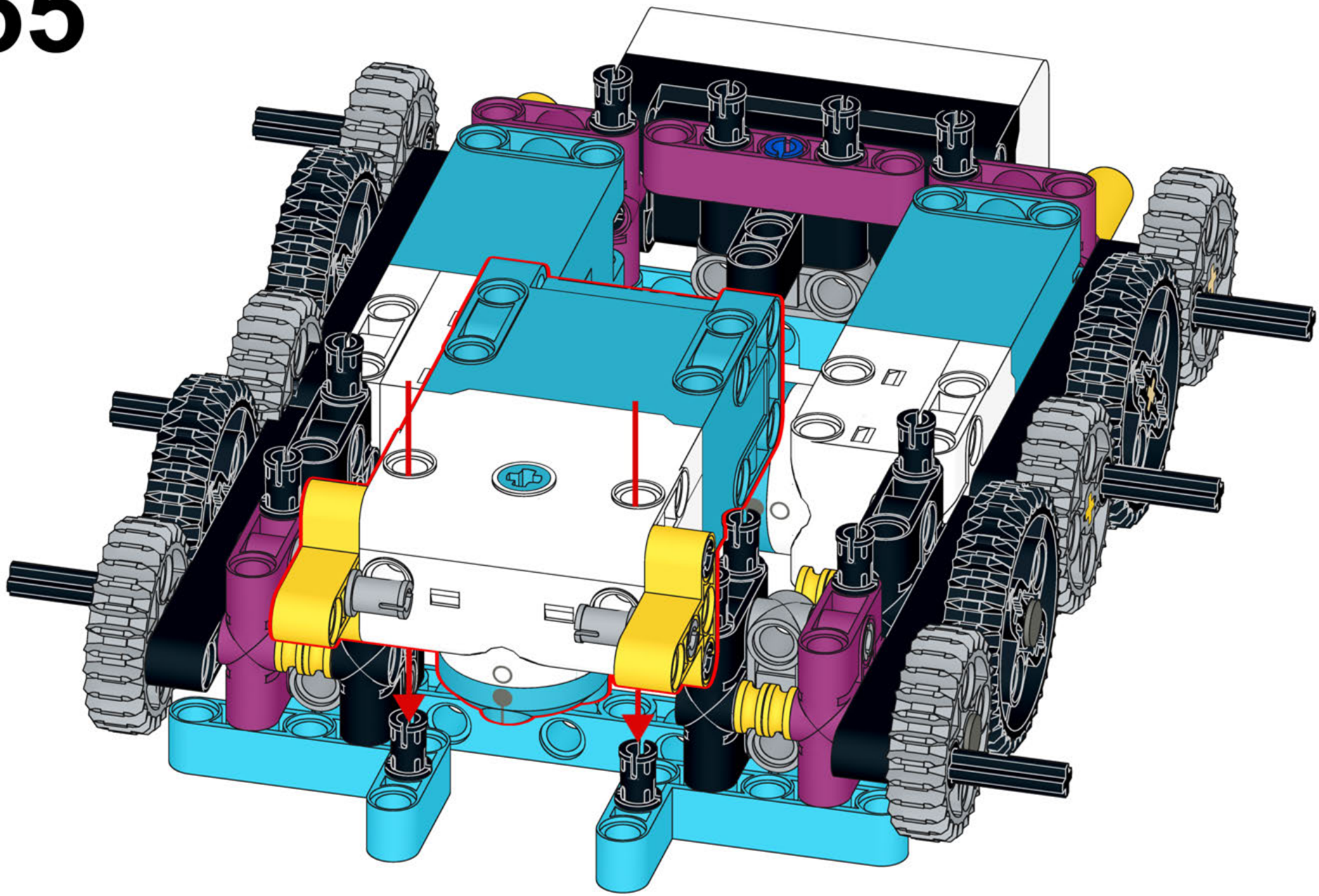

56

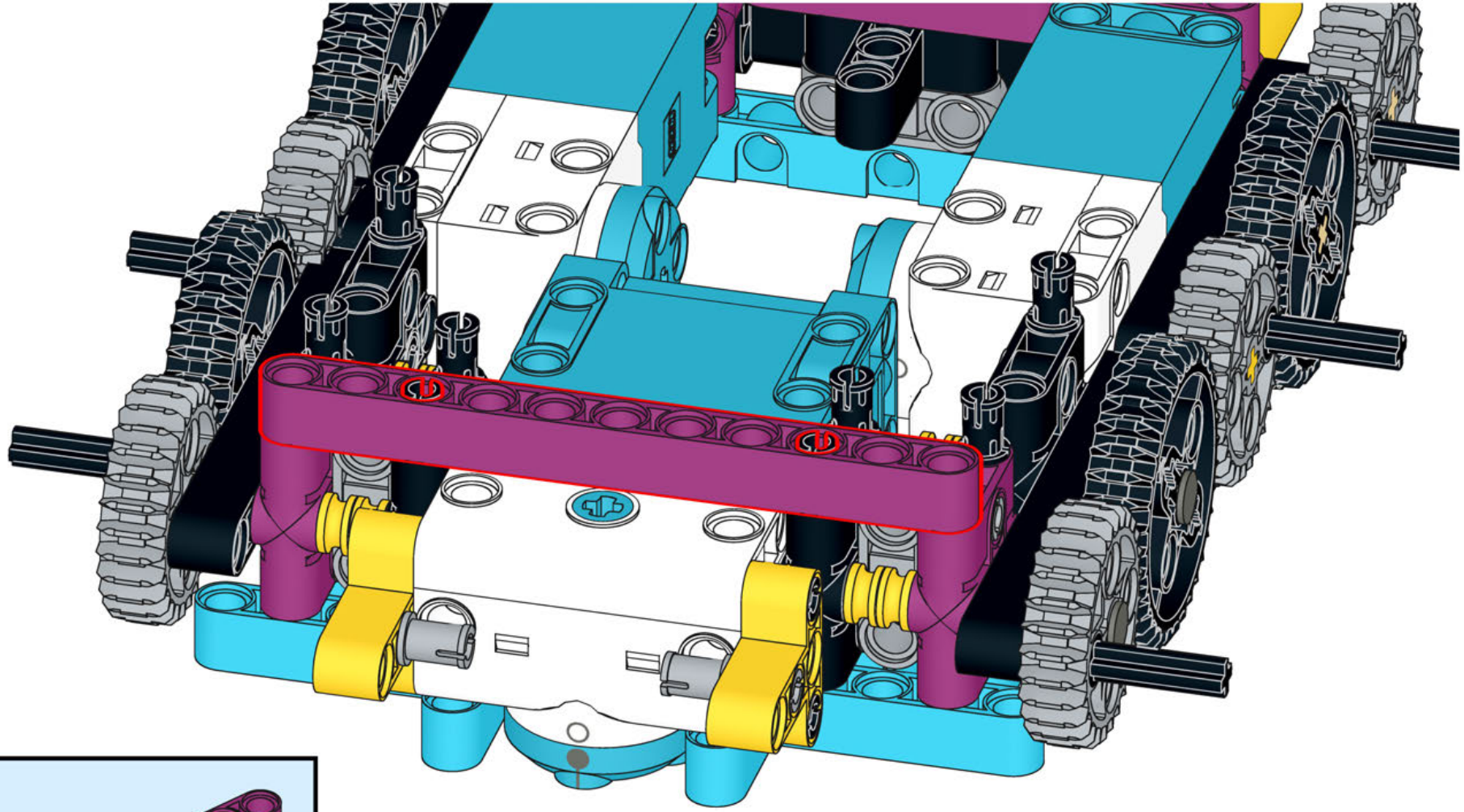

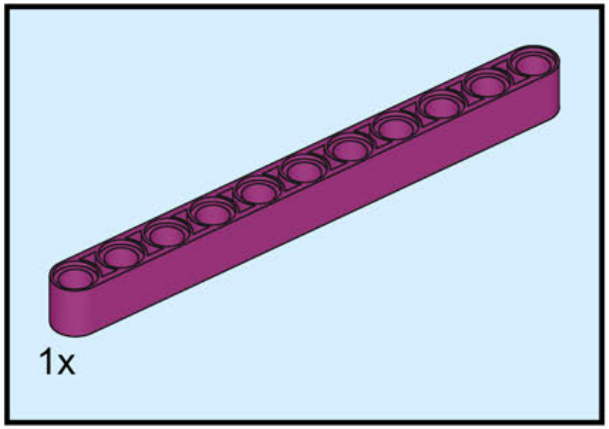

57

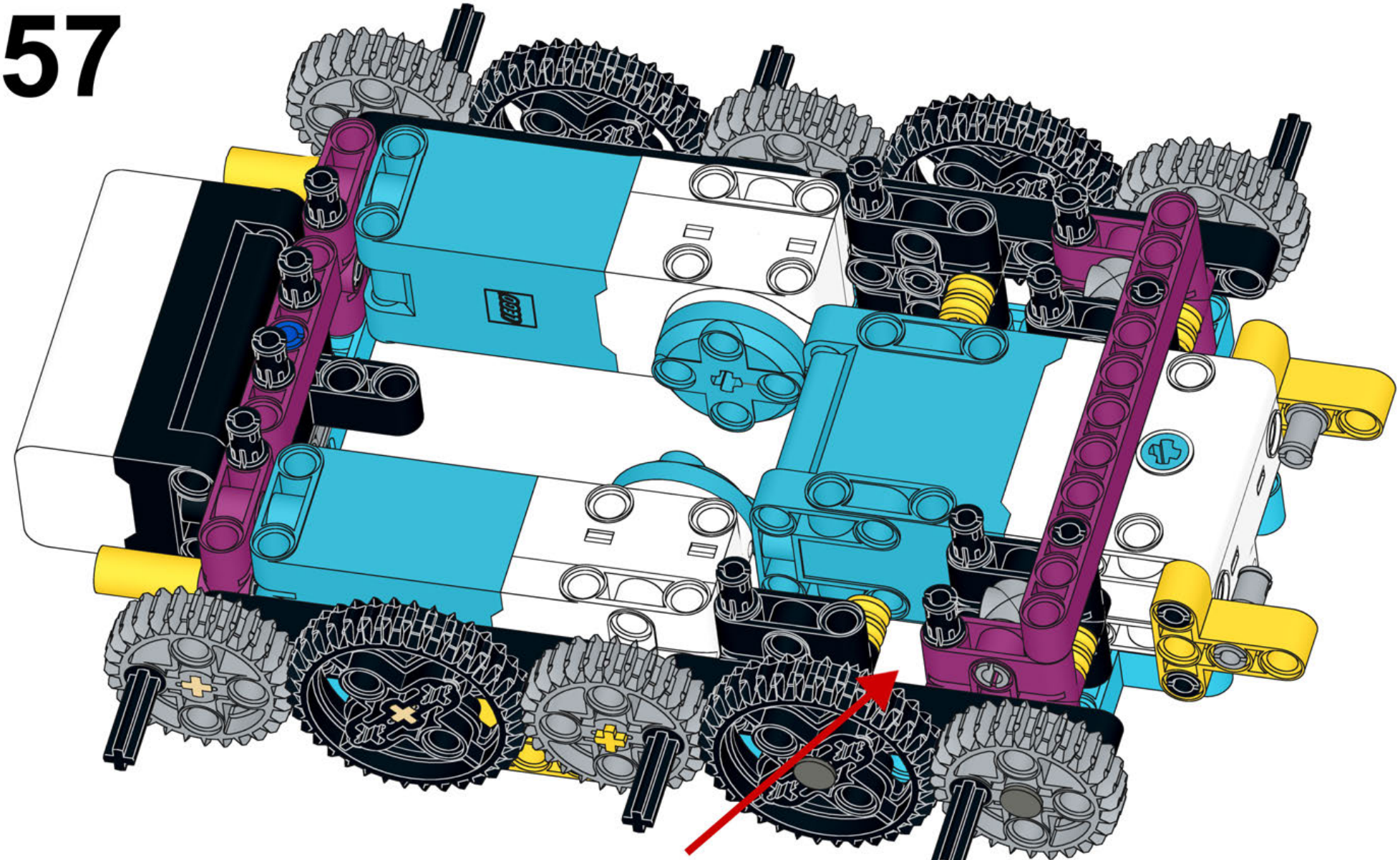

Attention: Bring the cable of the large motor through this gap to the outside.

58

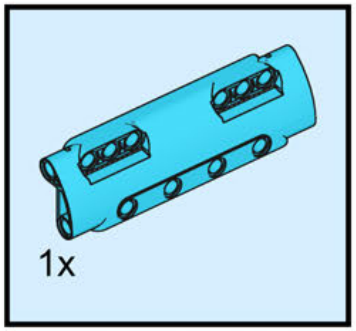

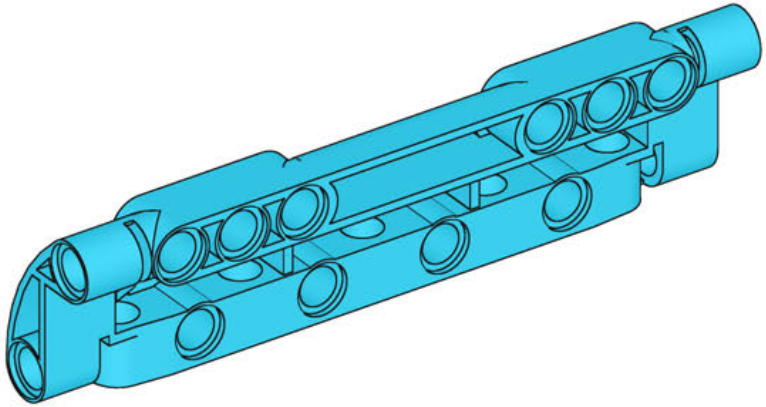

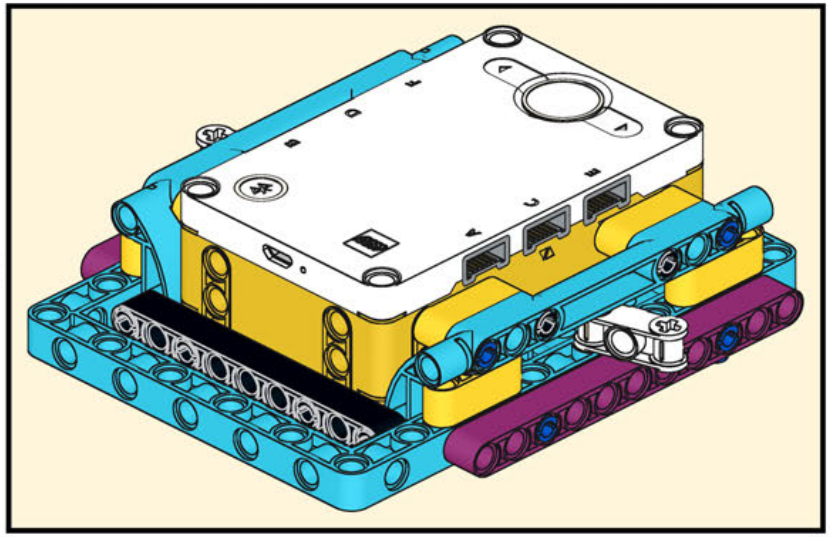

59

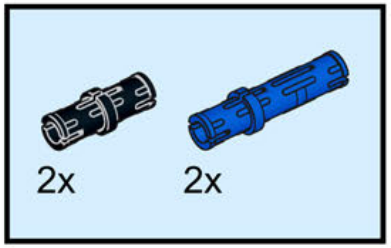

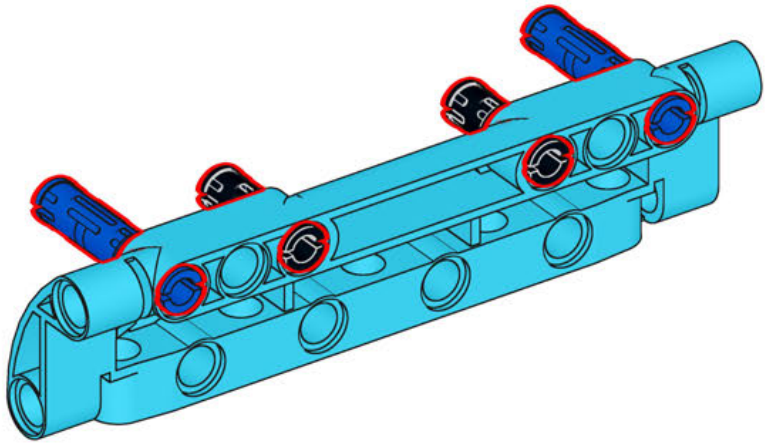

60

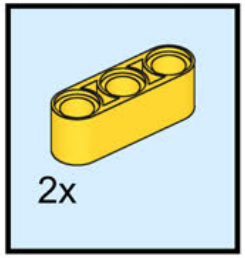

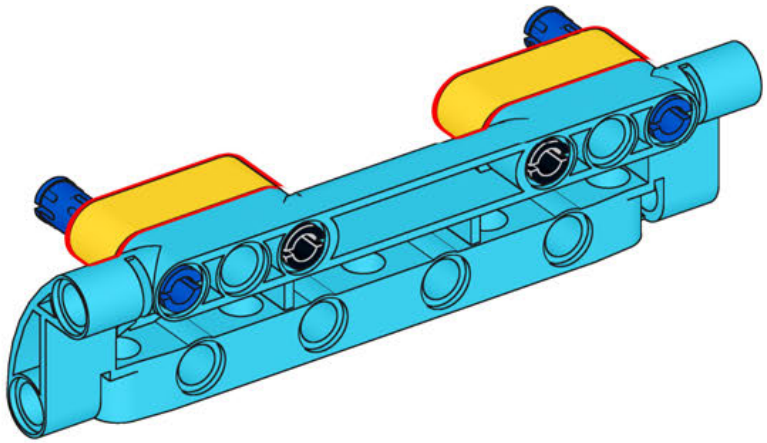

61

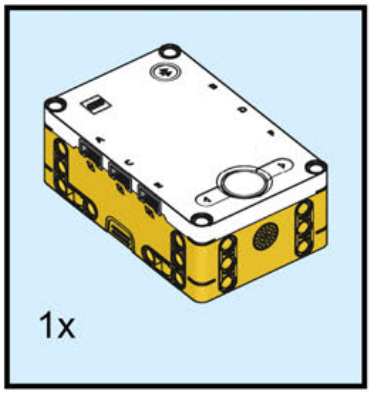

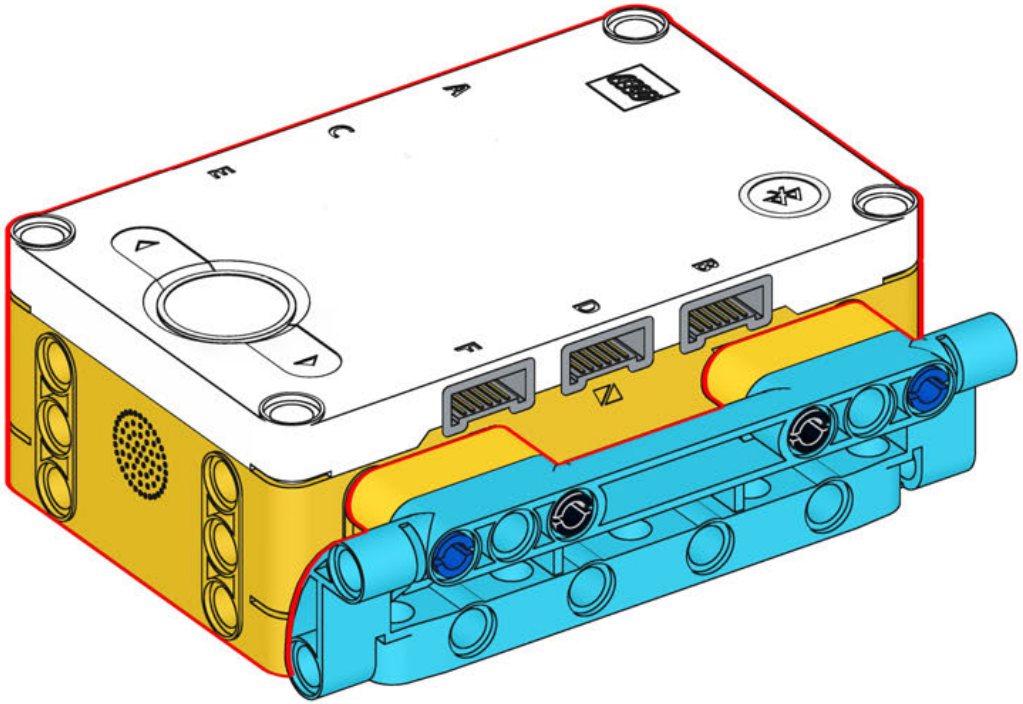

62

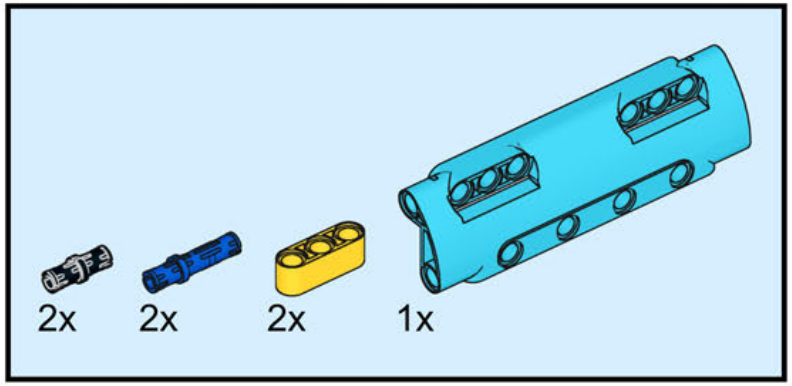

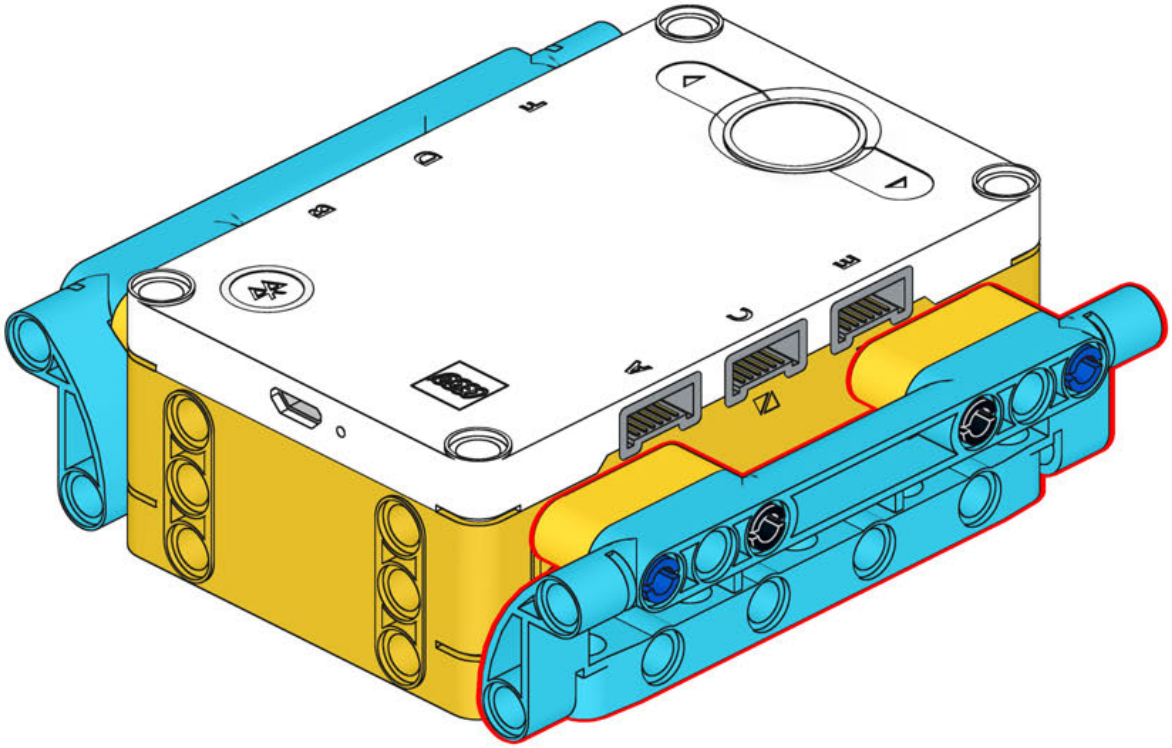

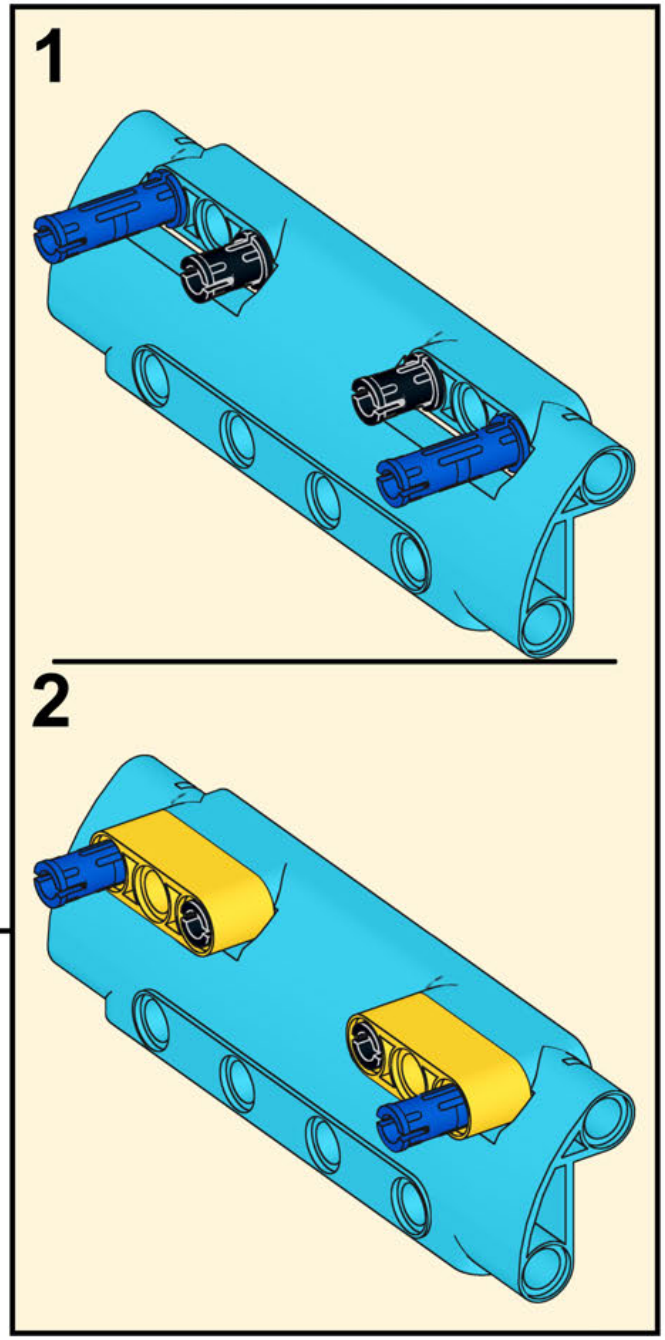

63

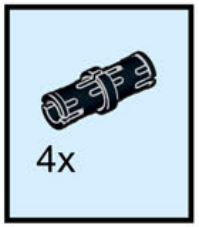

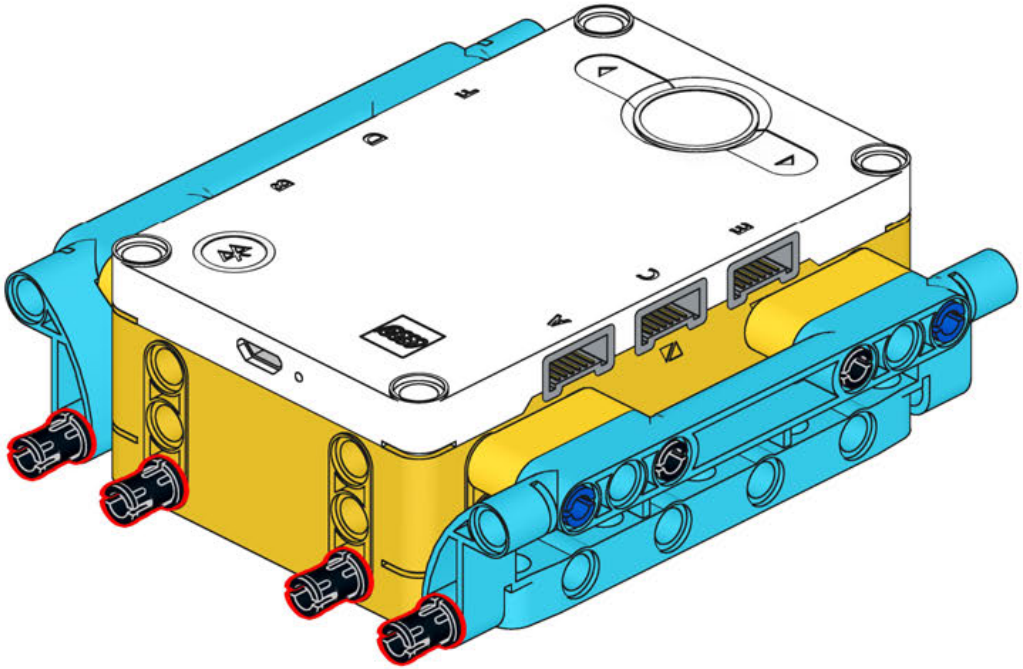

64

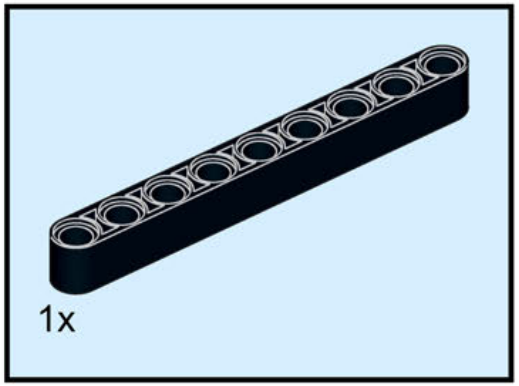

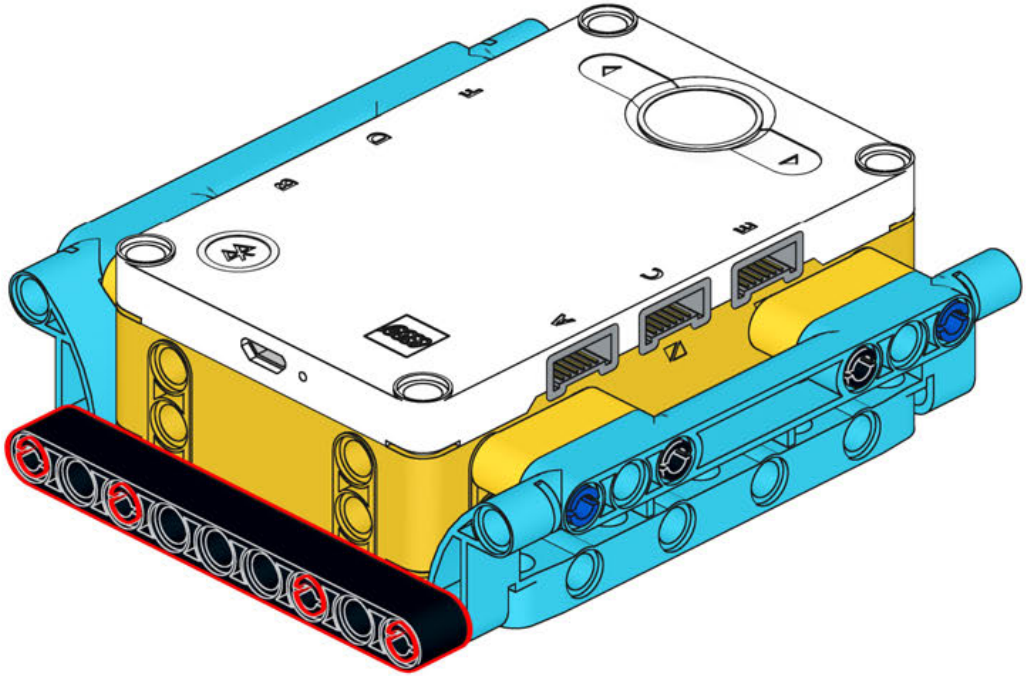

65

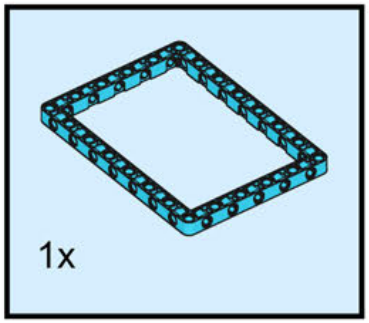

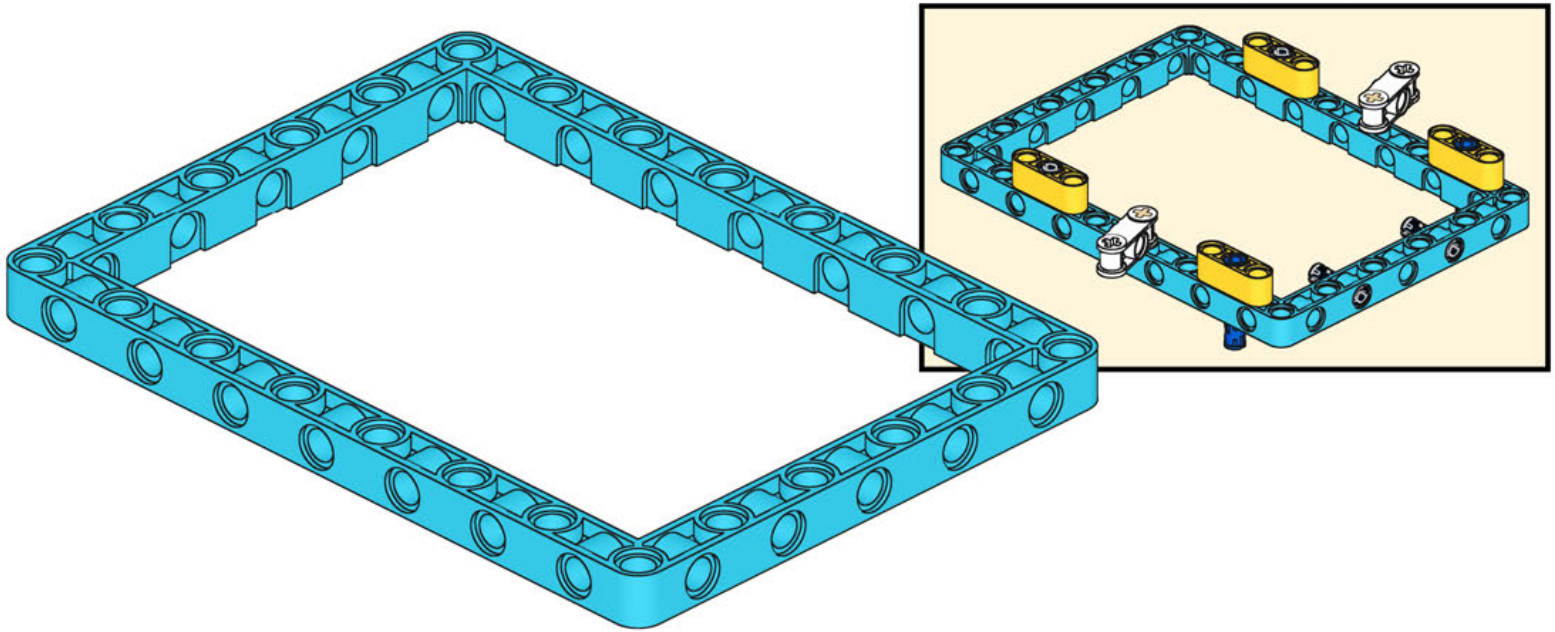

66

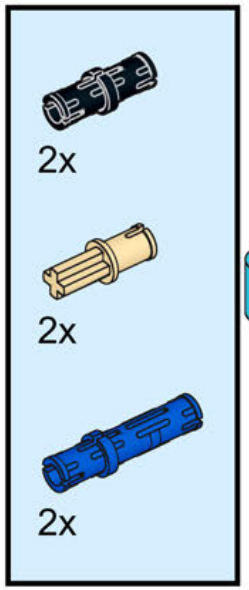

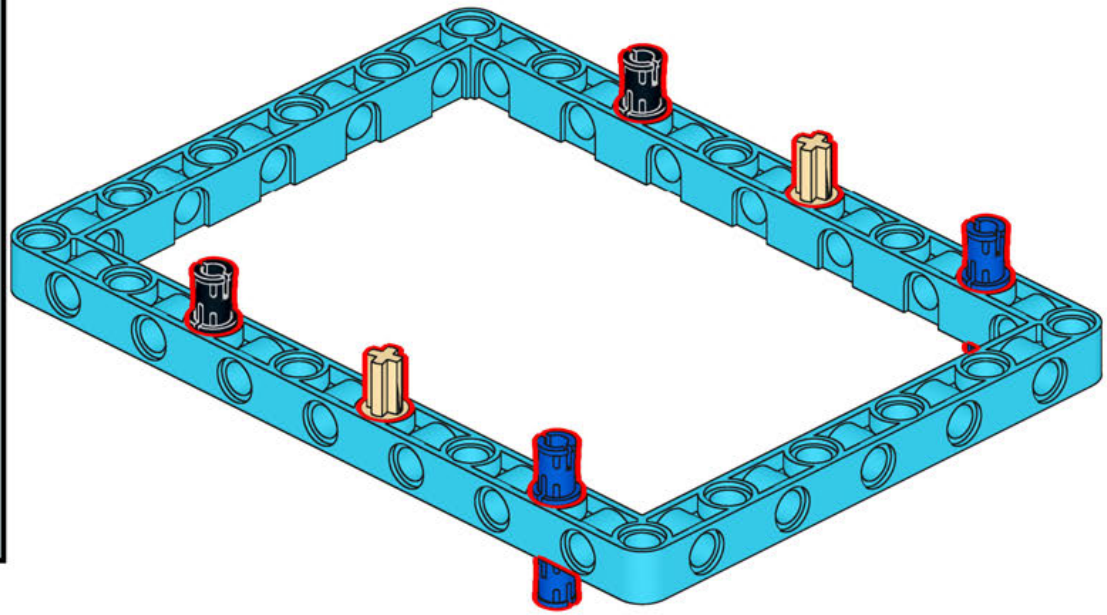

67

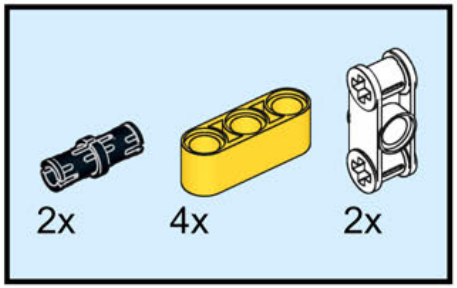

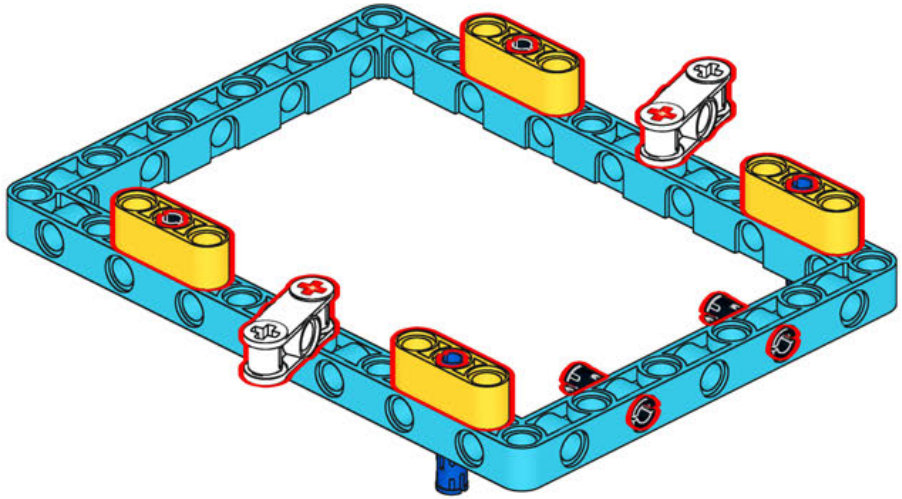

68

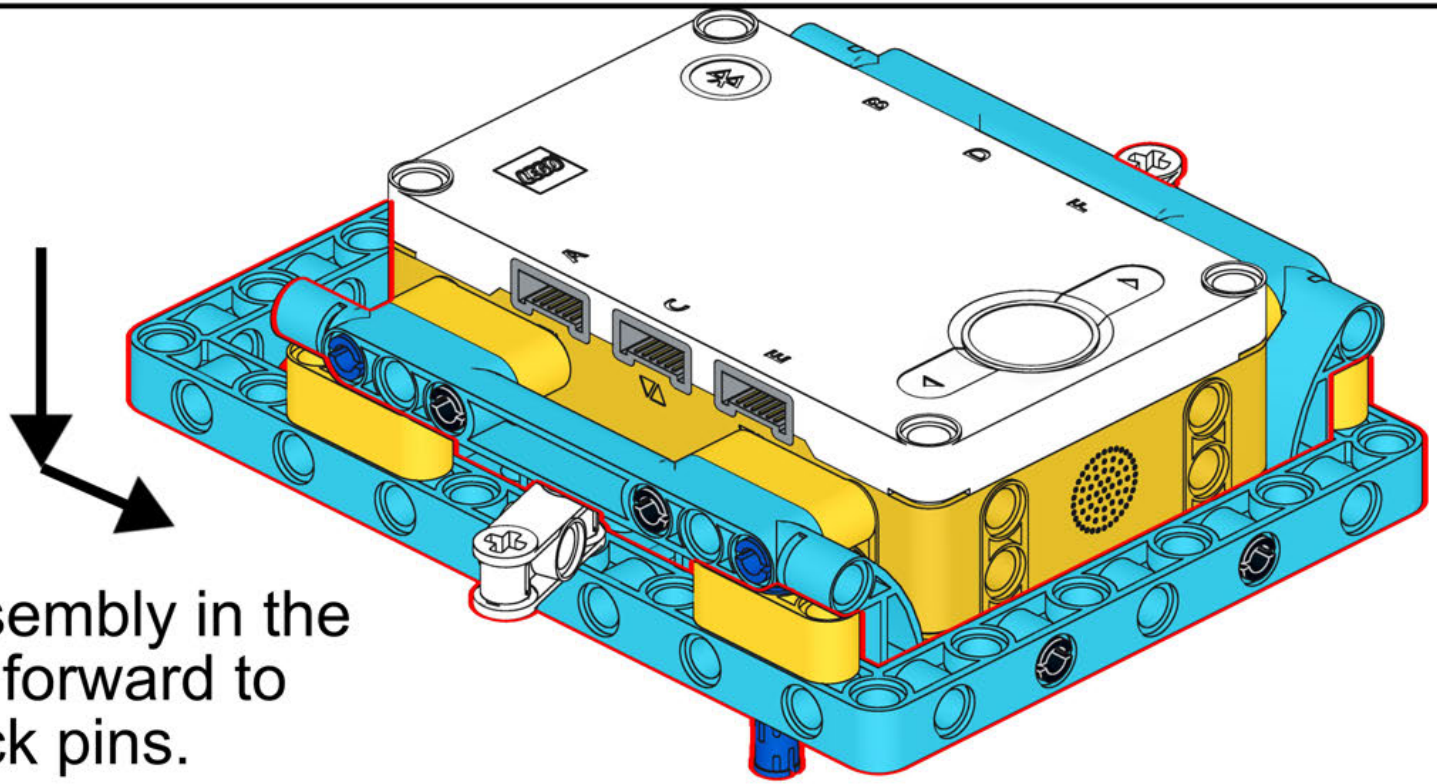

Place the hub assembly in the frame and slide it forward to click on the 2 black pins.

69

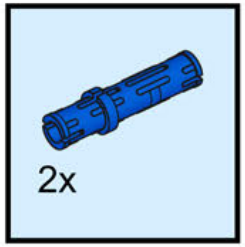

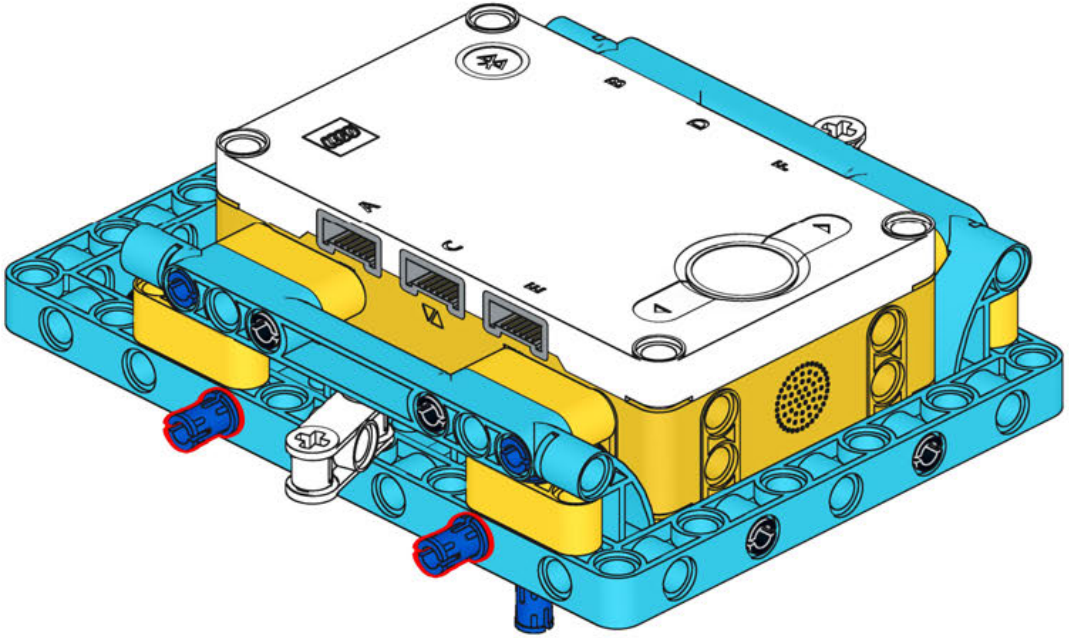

70

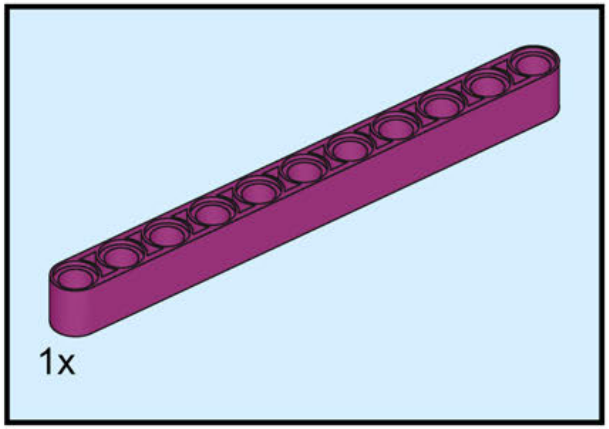

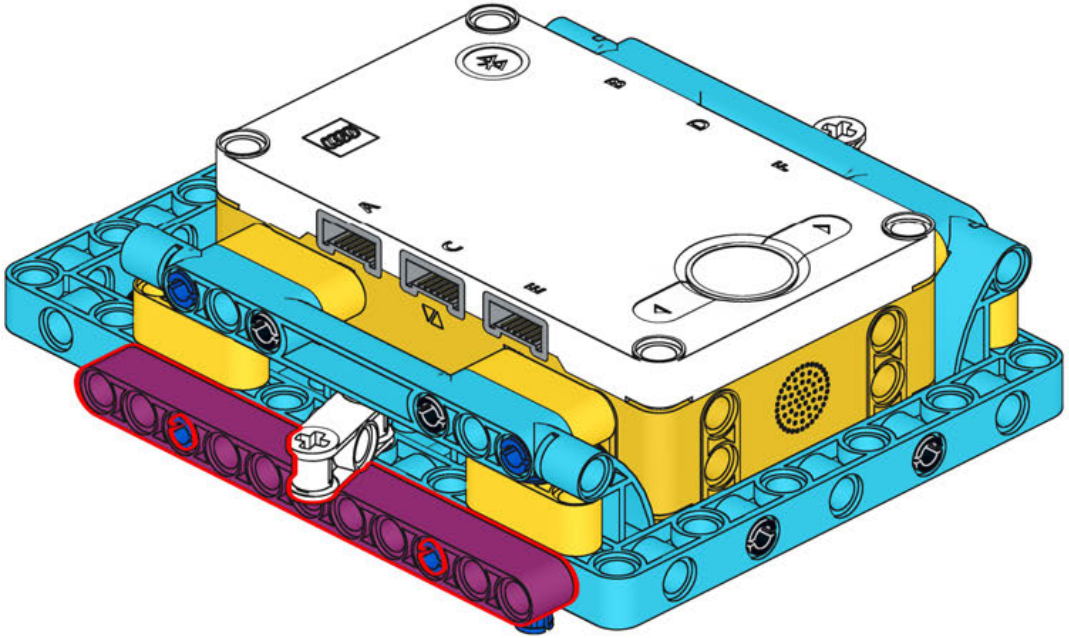

71

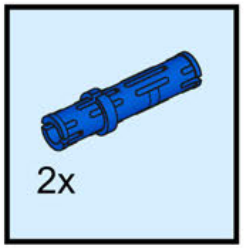

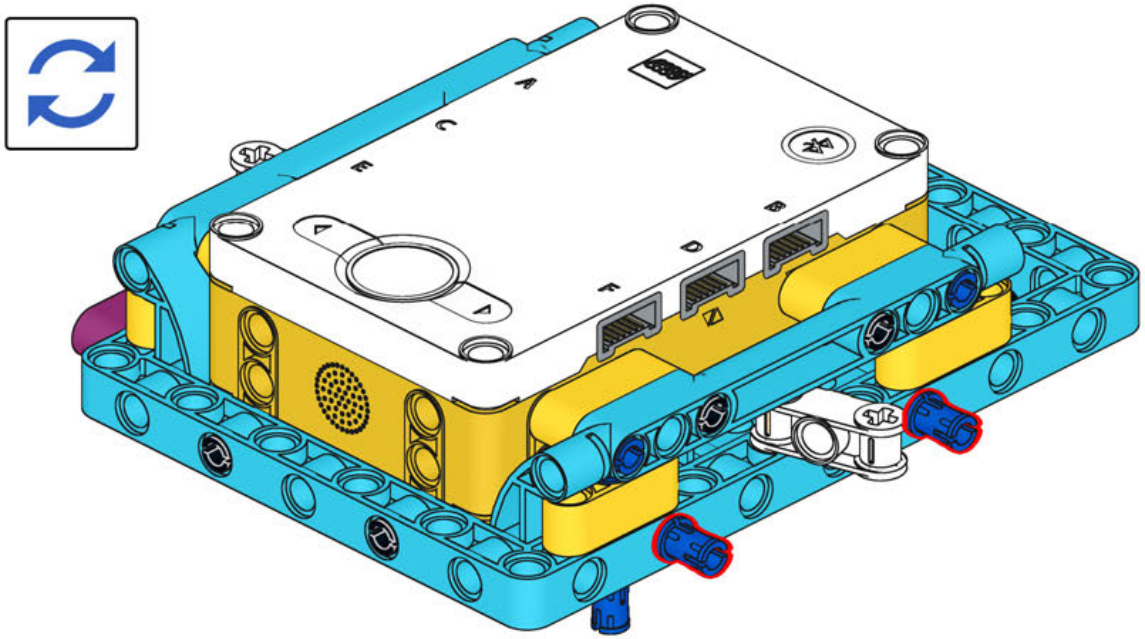

72

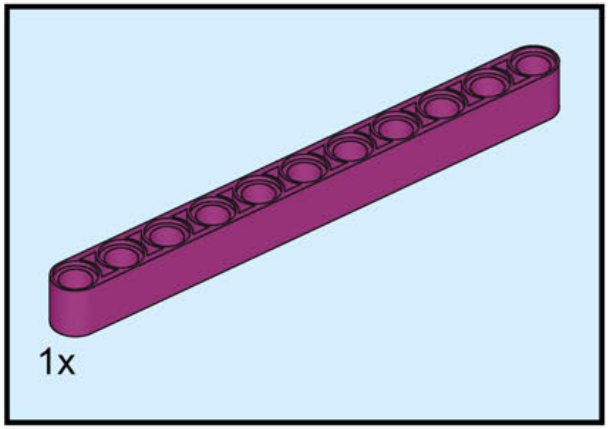

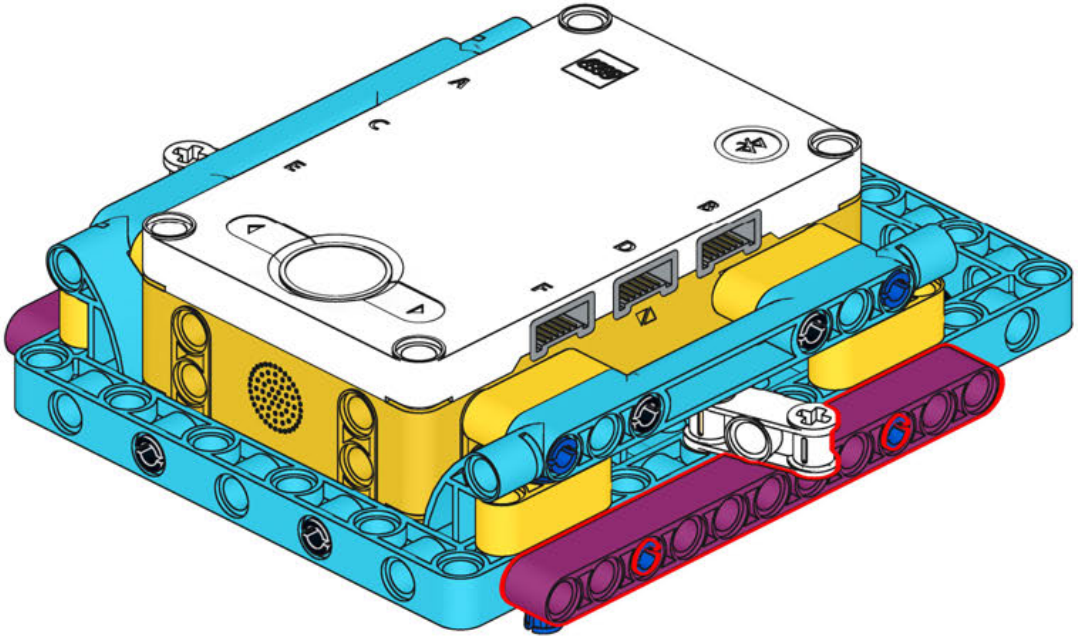

73

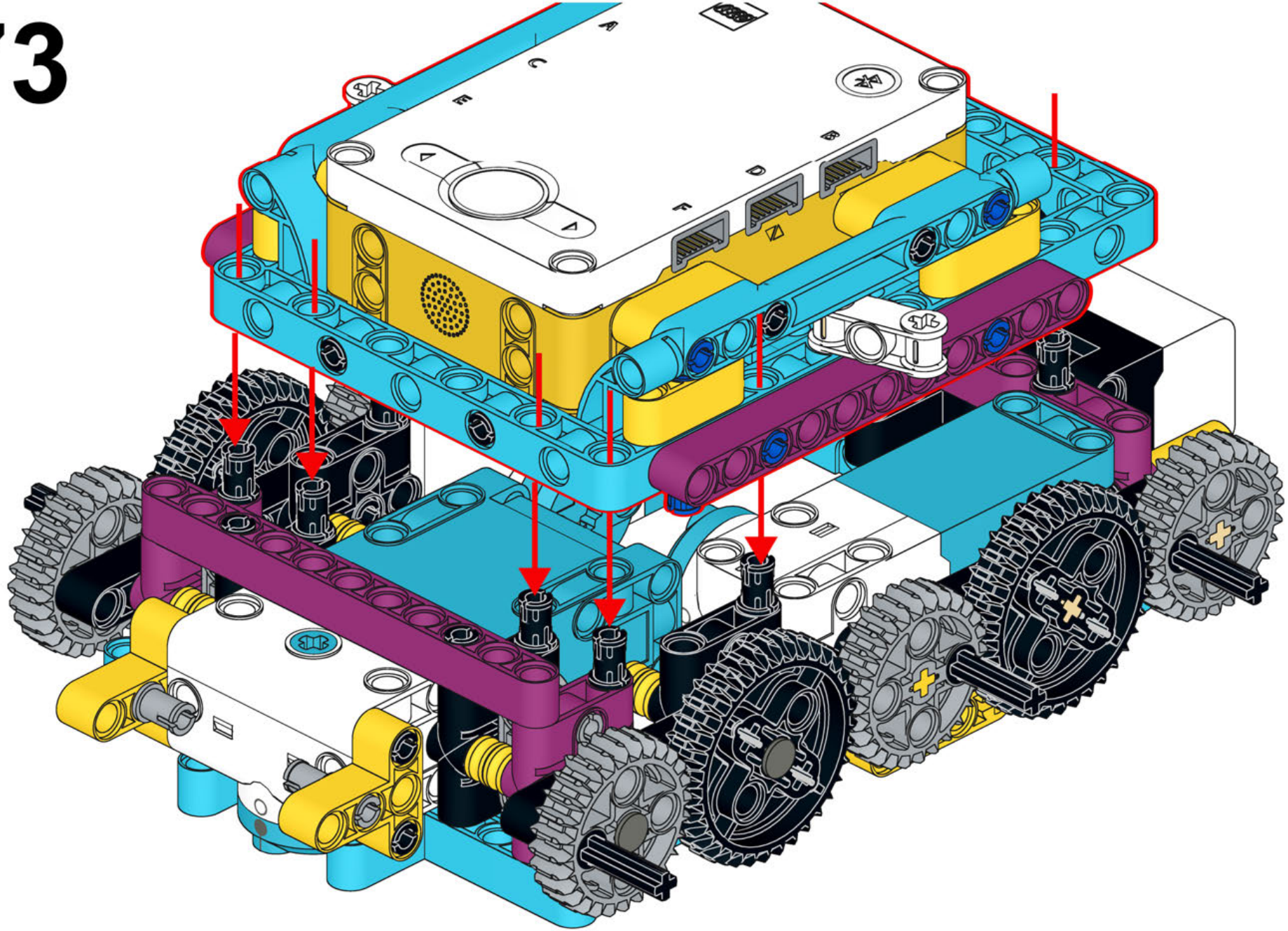

74

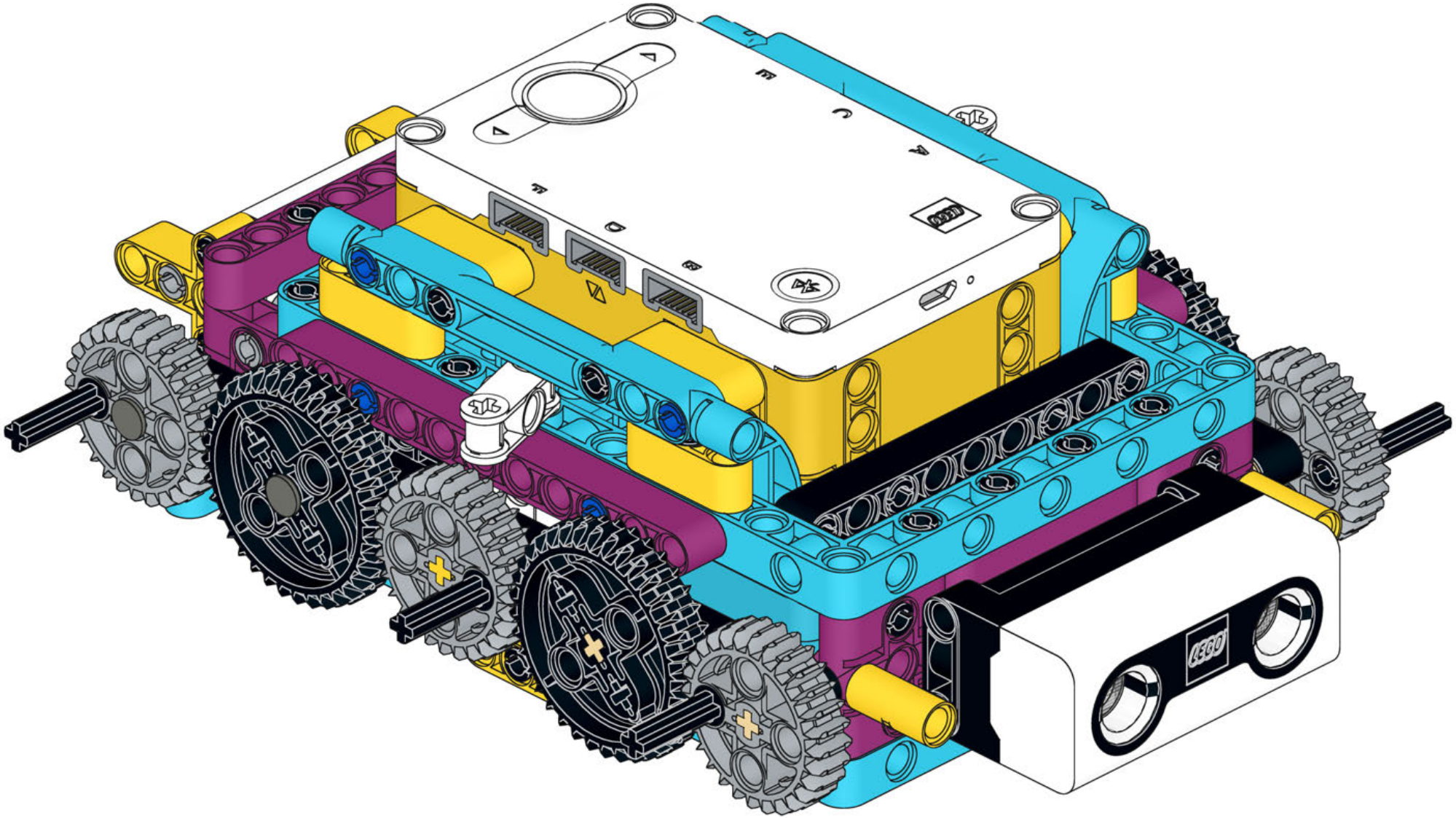

75

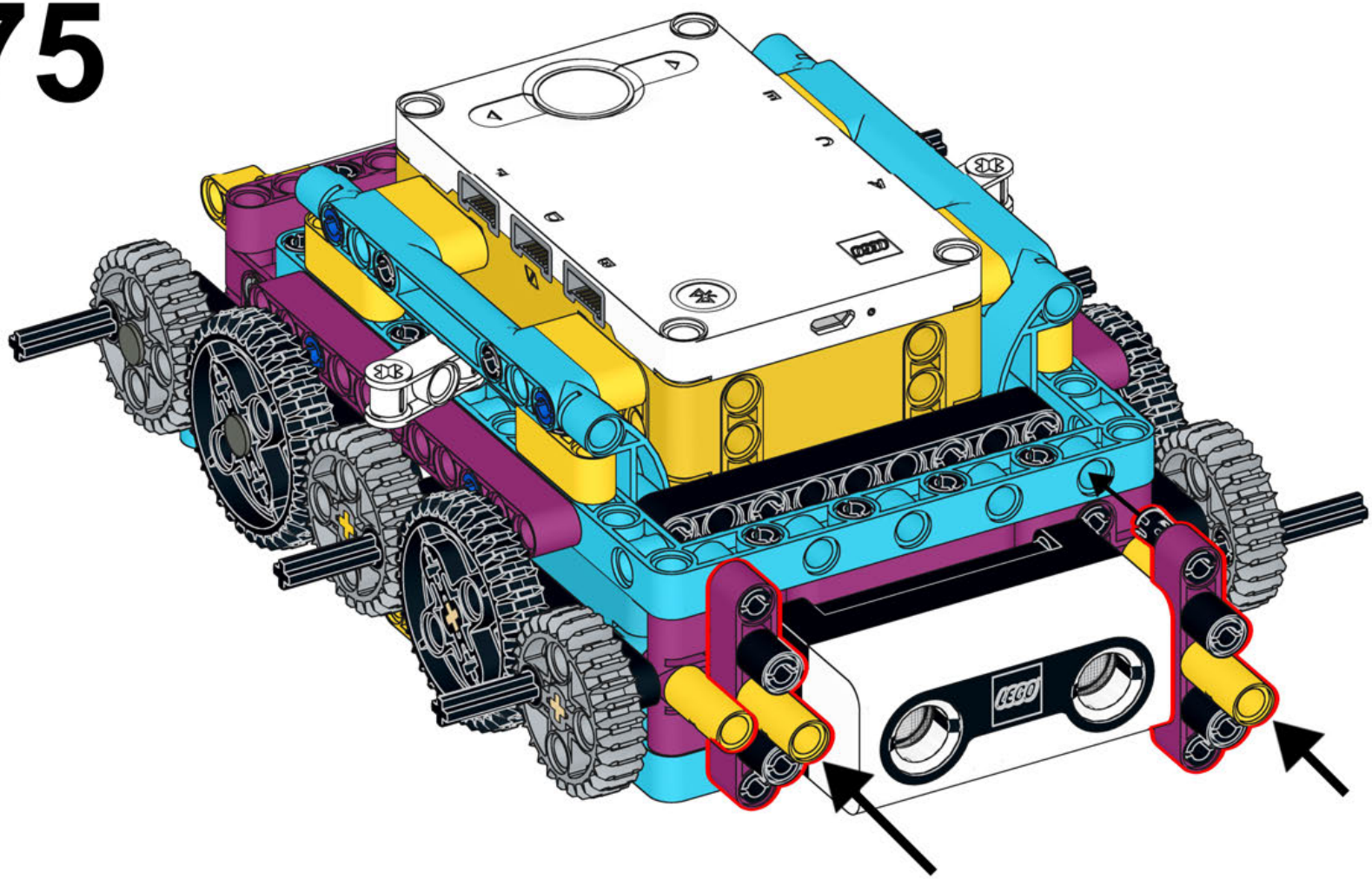

2x

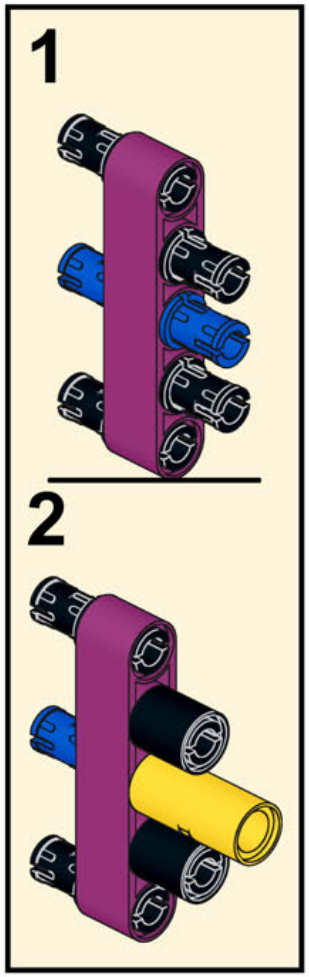

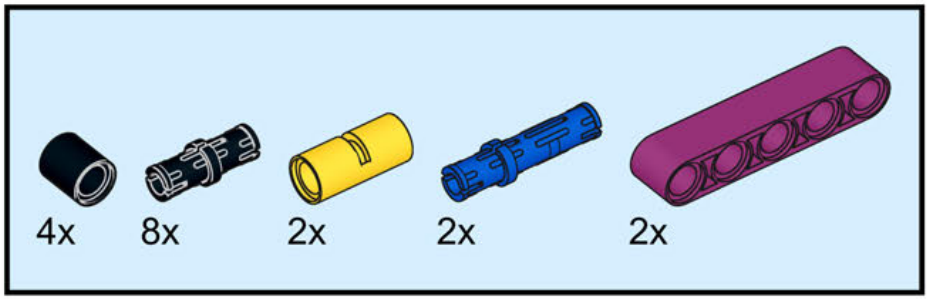

76

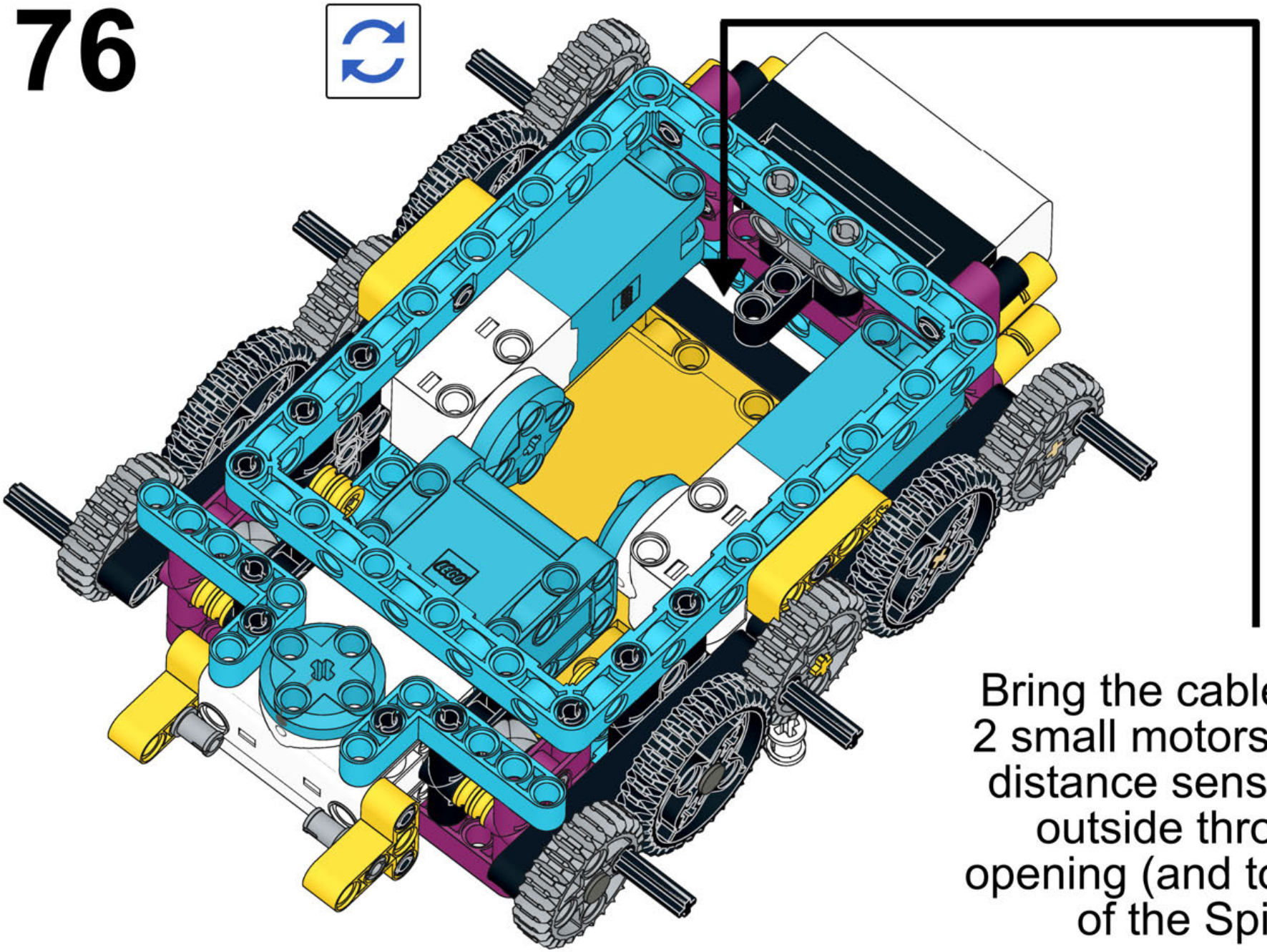

Bring the cables of the 2 small motors and the distance sensor to the outside through this opening (and to the top of the Spike hub).

77

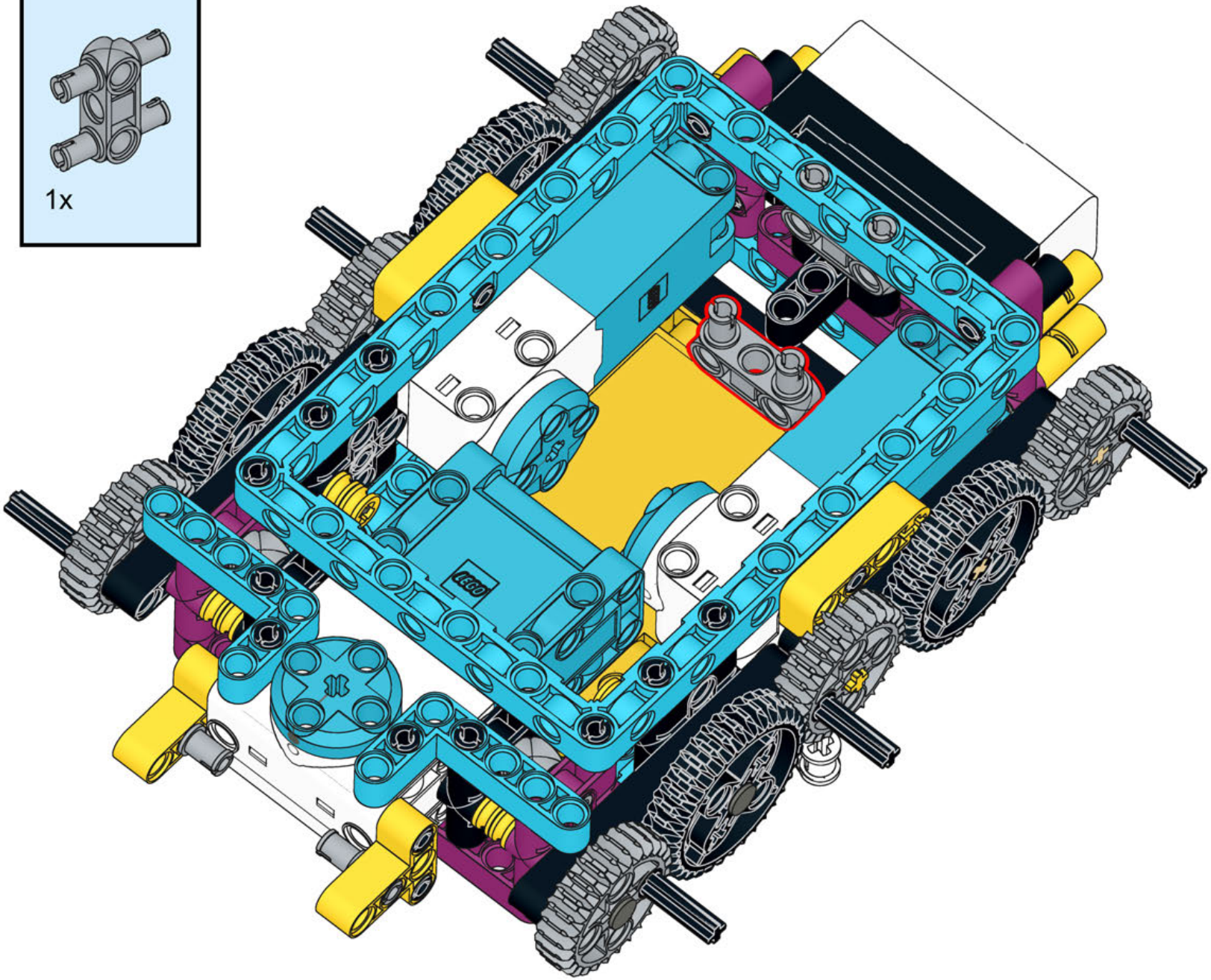

78

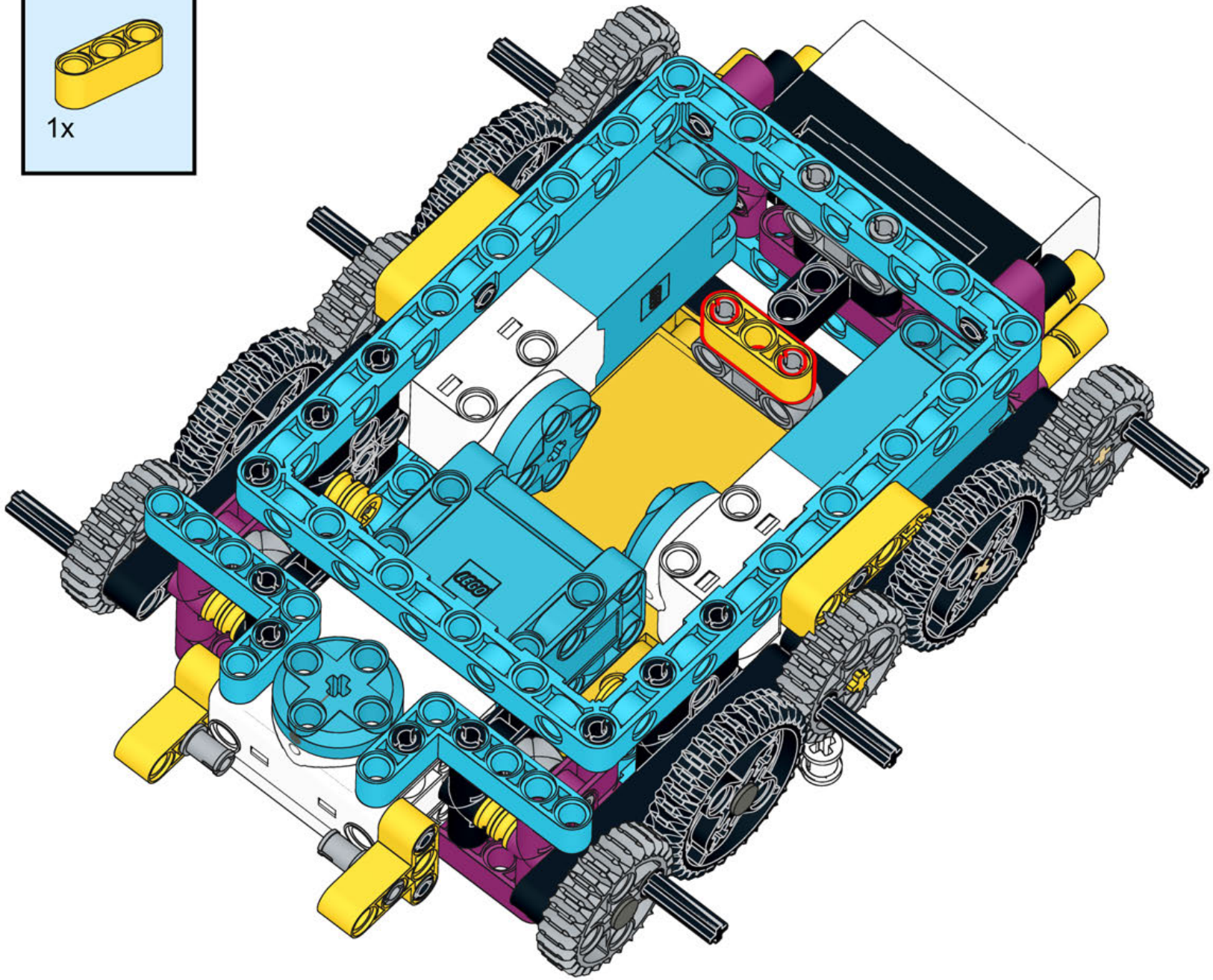

79

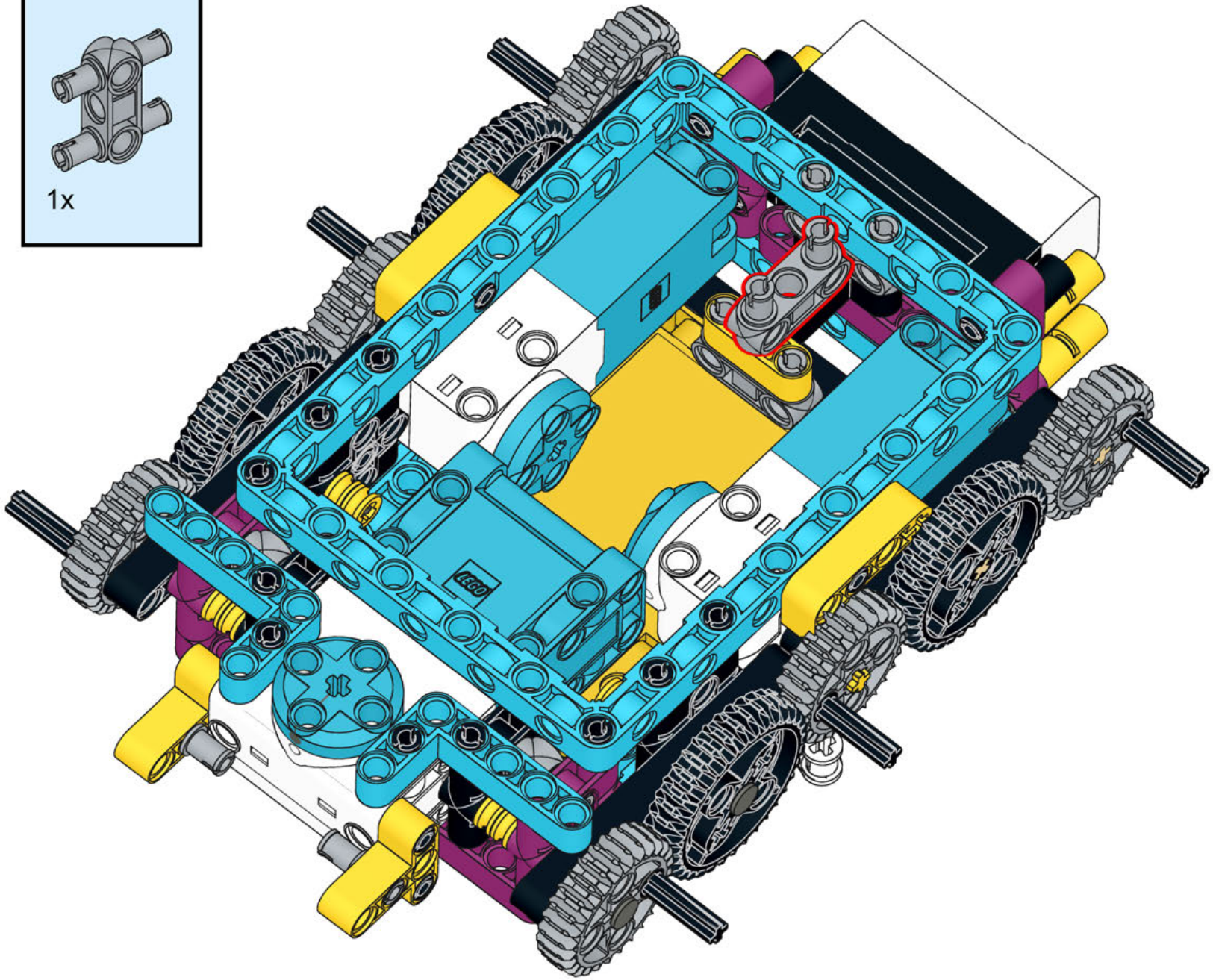

80

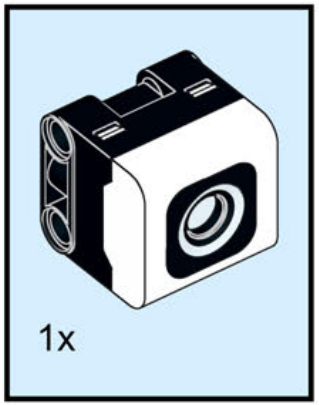

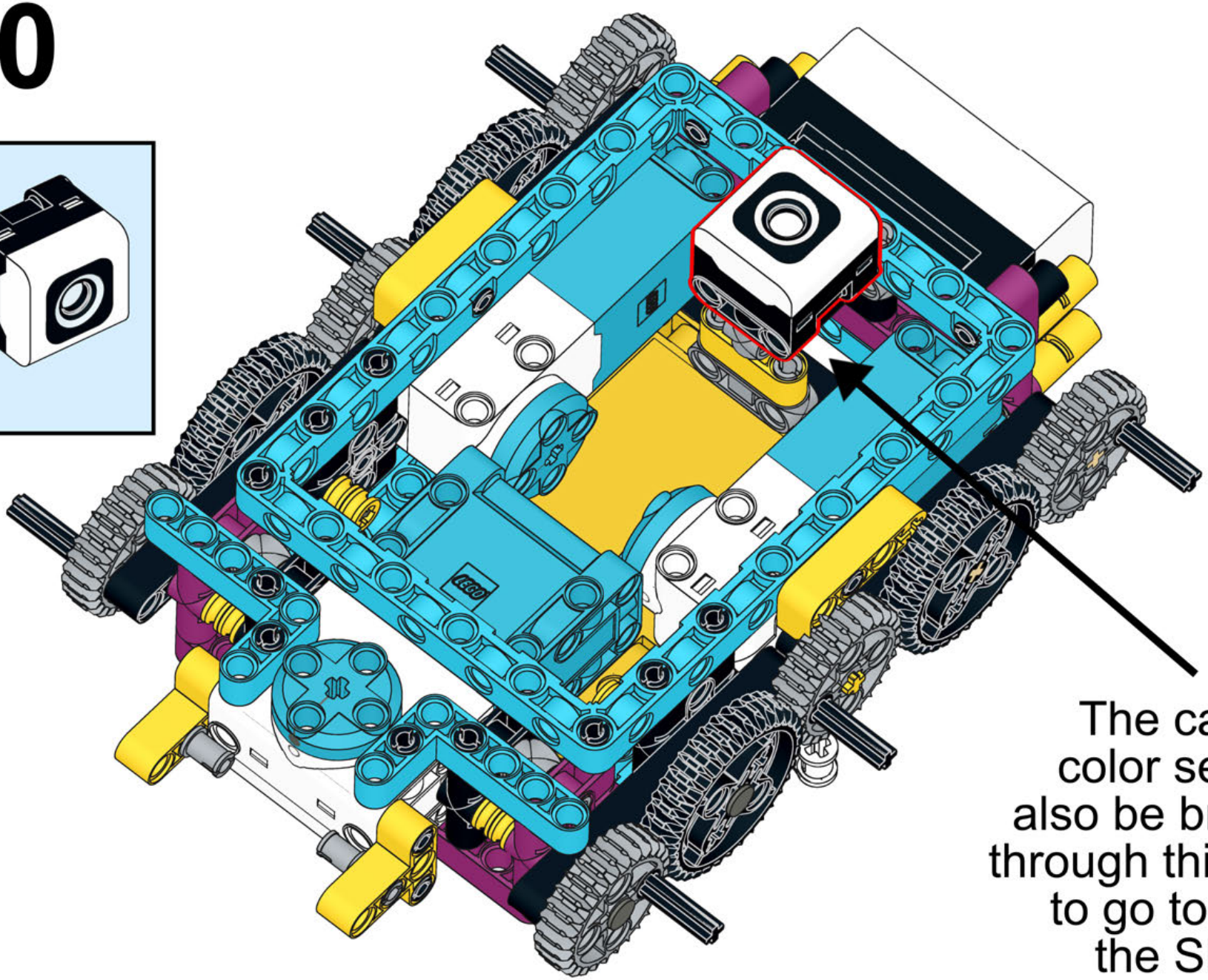

The cable of the color sensor may also be brought out through this opening to go to the top of the SPIKE hub.

81

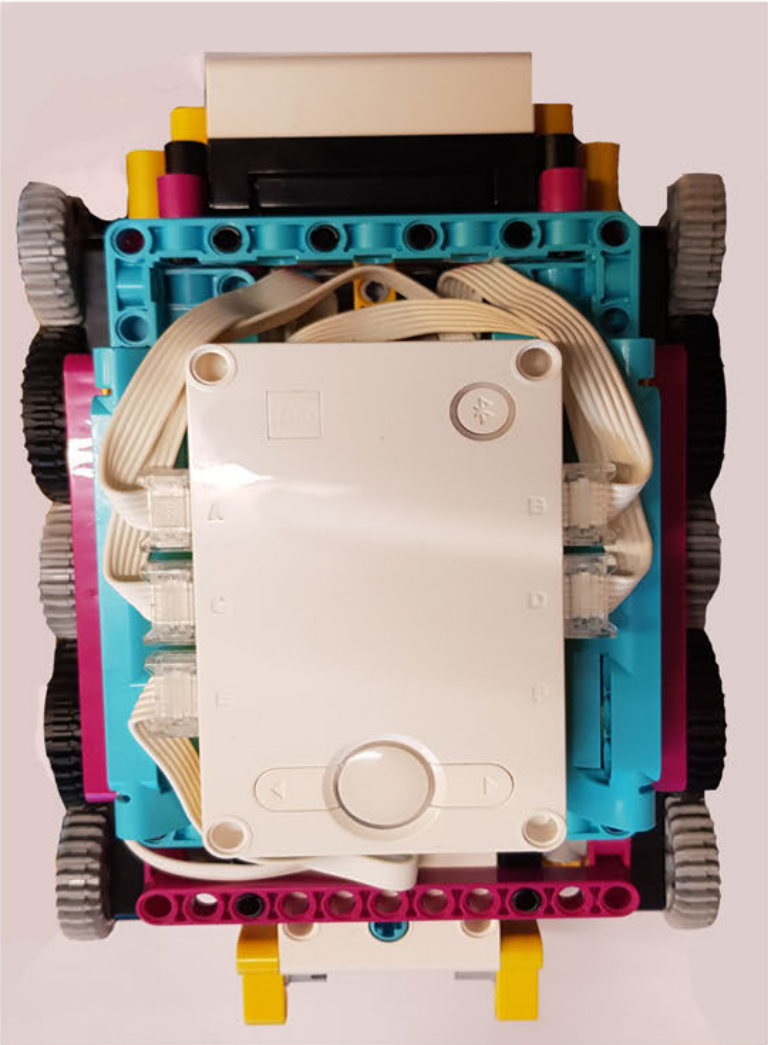

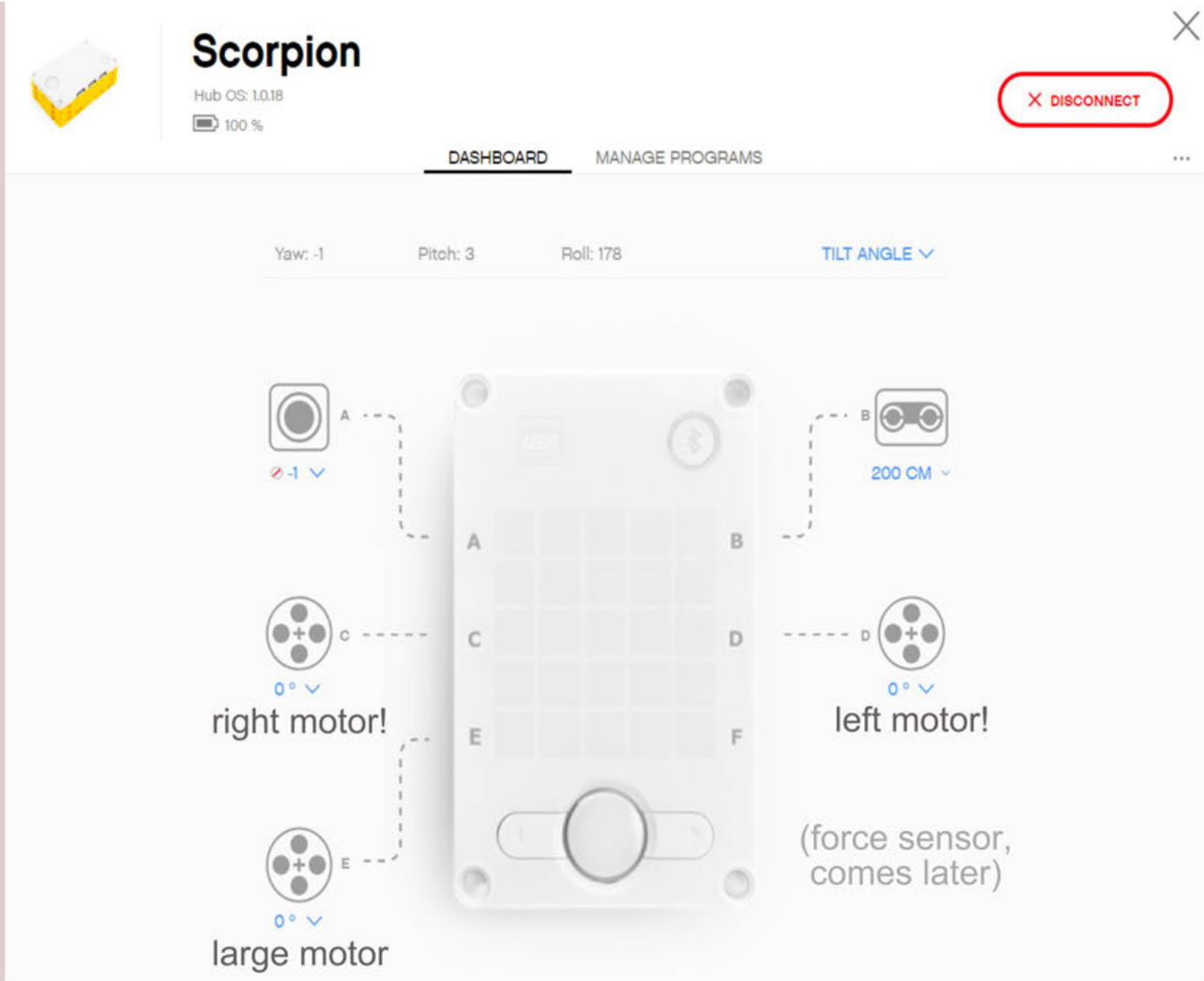

Connect the cables to the indicated ports of the hub, make sure you connect the cables of the small motors to the other side of the hub each time (crossing the cables).

82

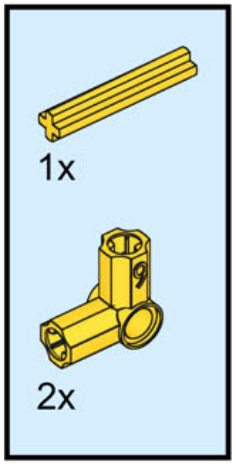

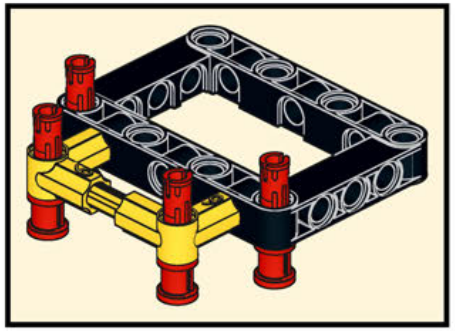

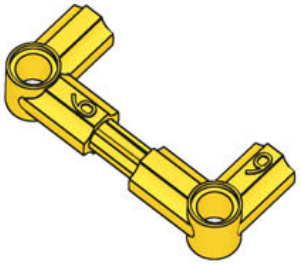

83

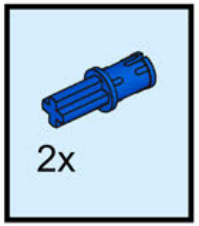

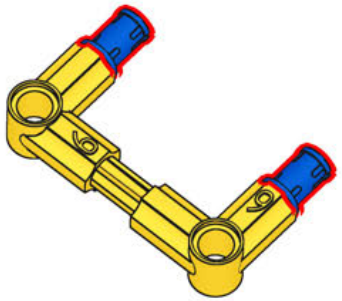

84

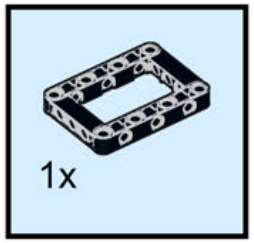

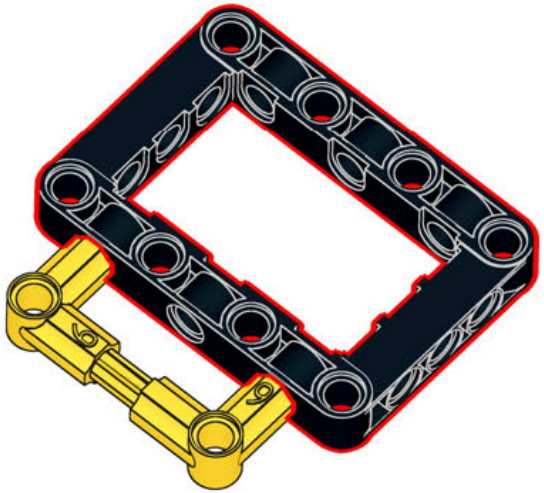

85

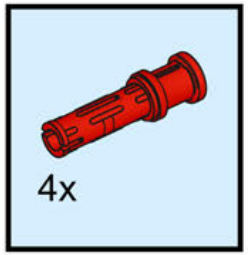

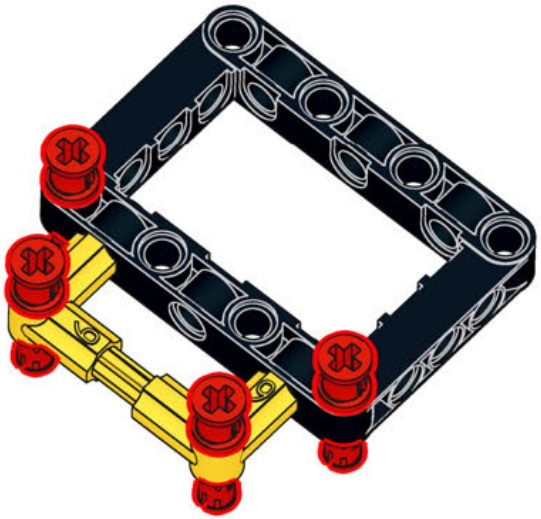

86

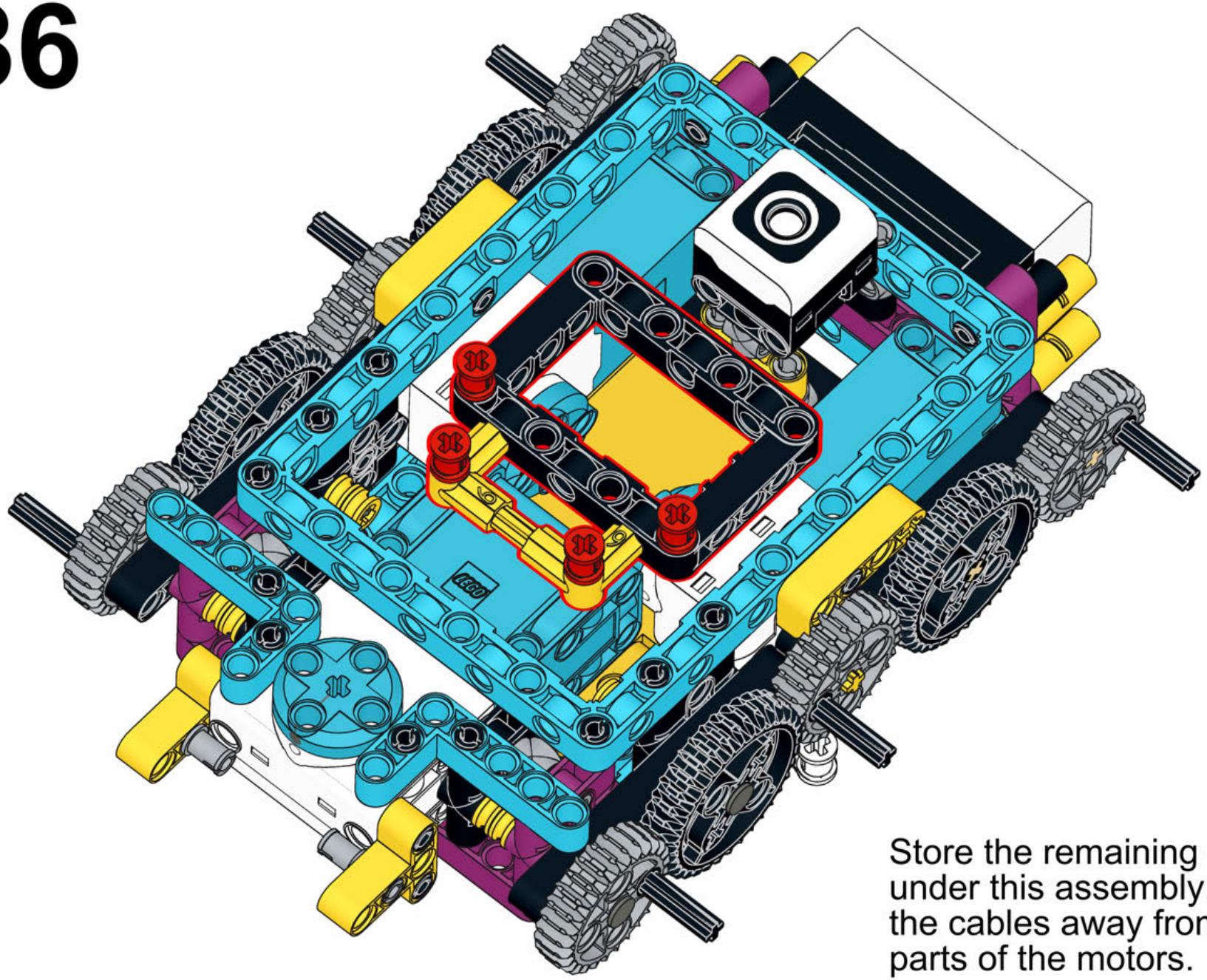

Store the remaining cable lengths under this assembly. Try to keep the cables away from the rotating parts of the motors.

87

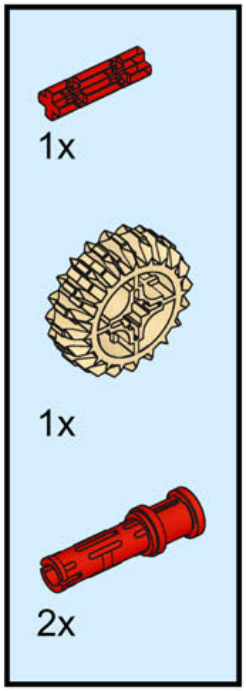

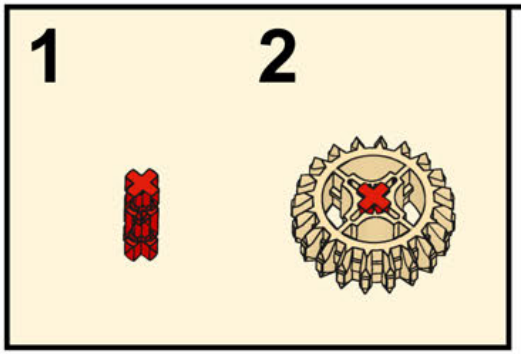

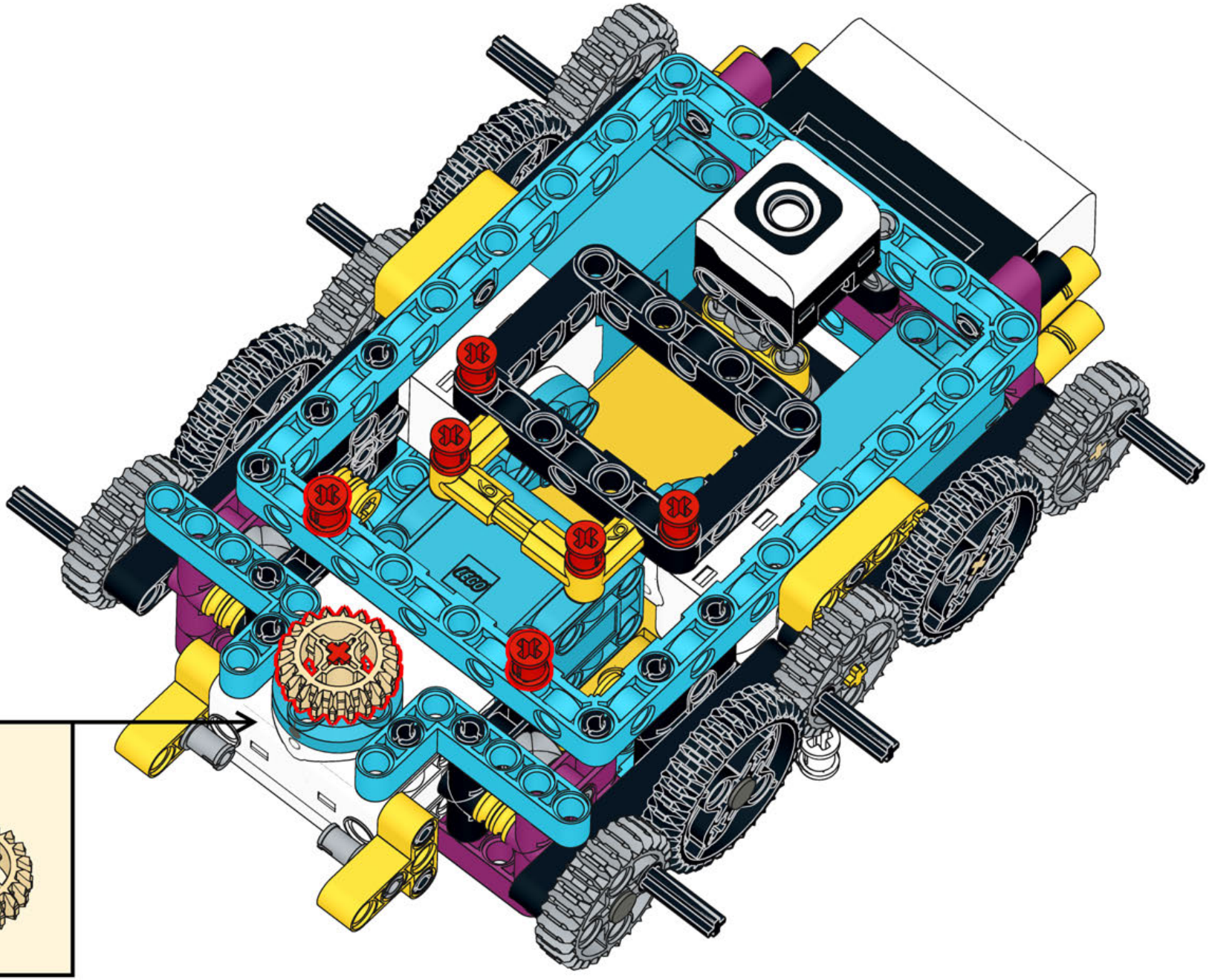

88

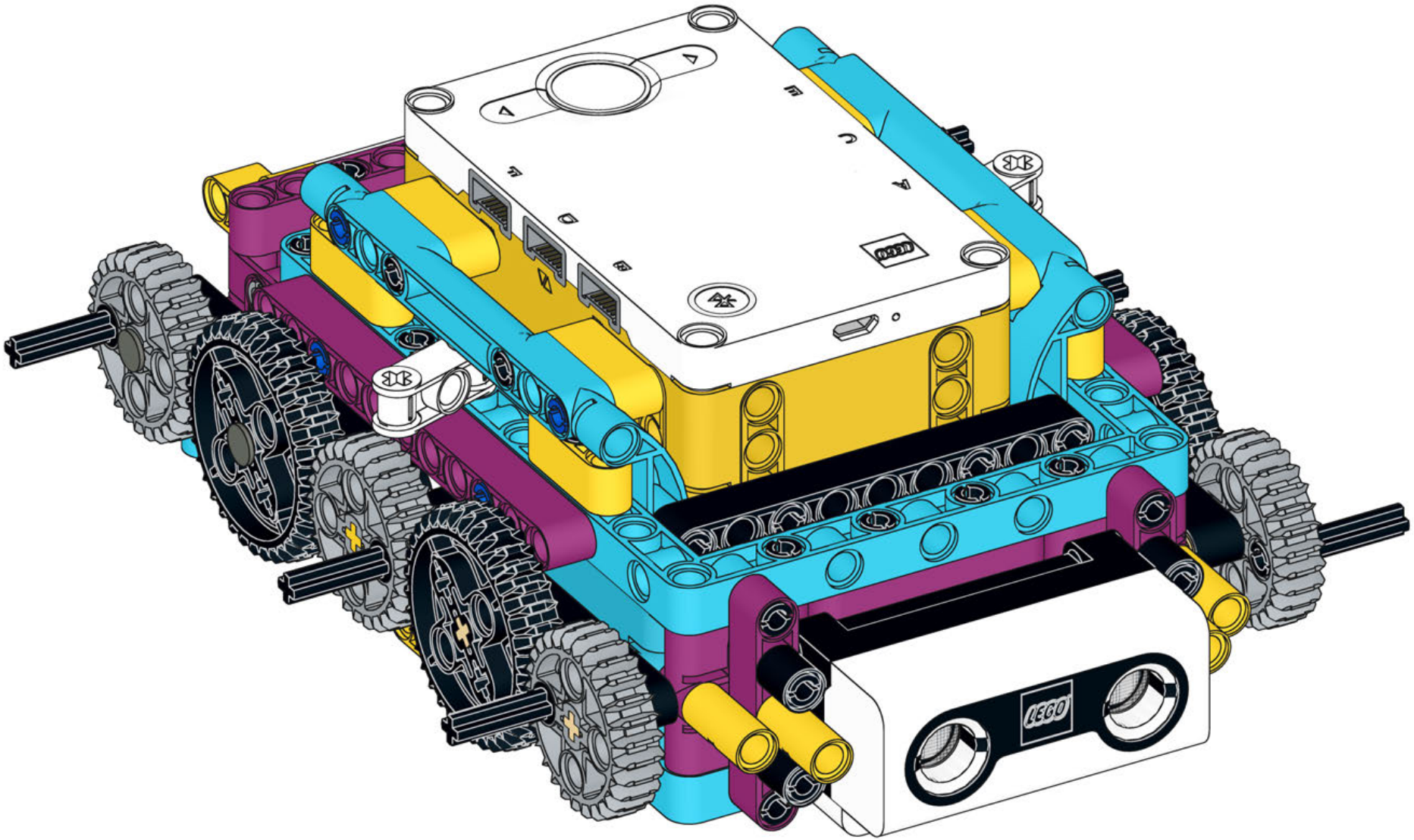

89

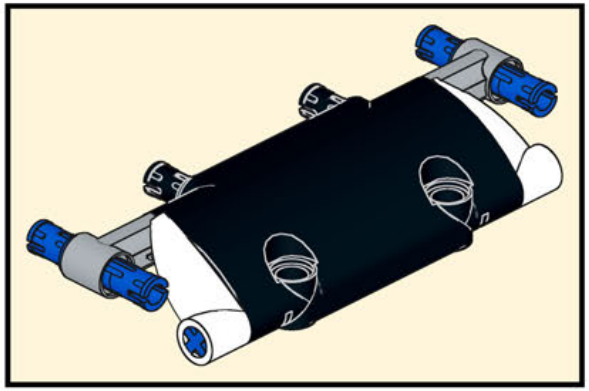

90

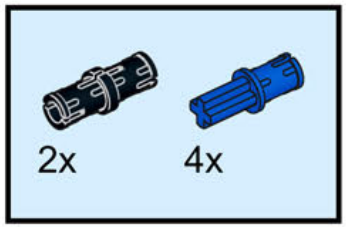

91

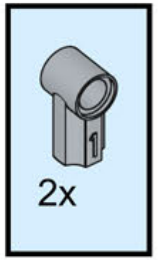

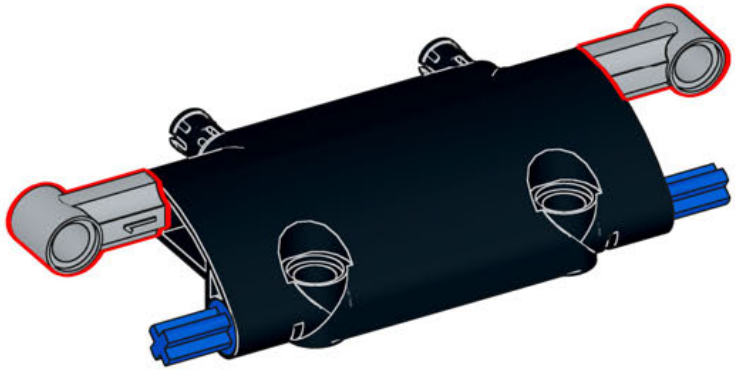

92

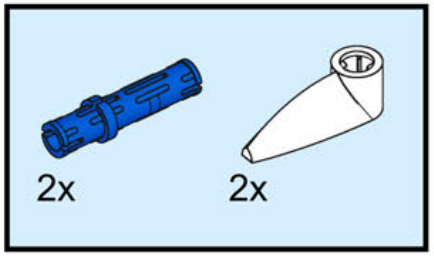

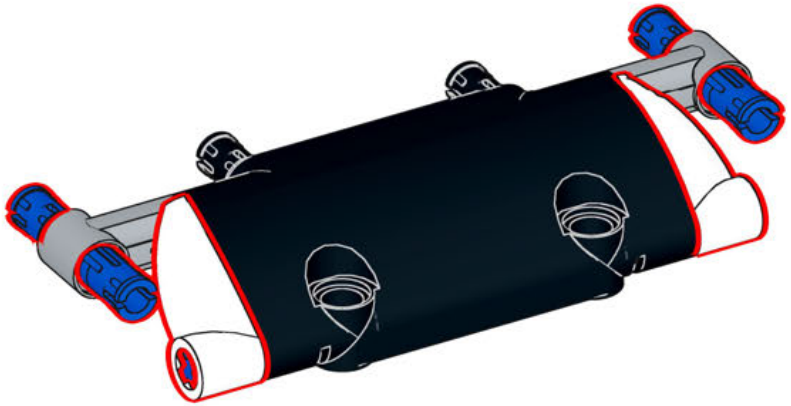

If you don't have 6 of these white toothpieces, you can use 2 of those black rubber pieces instead.

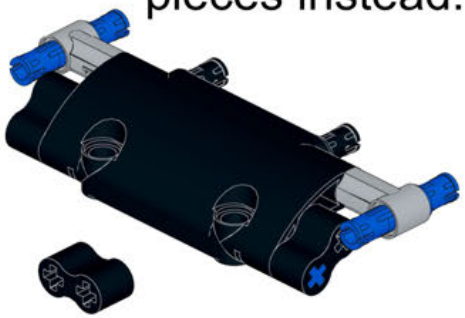

93

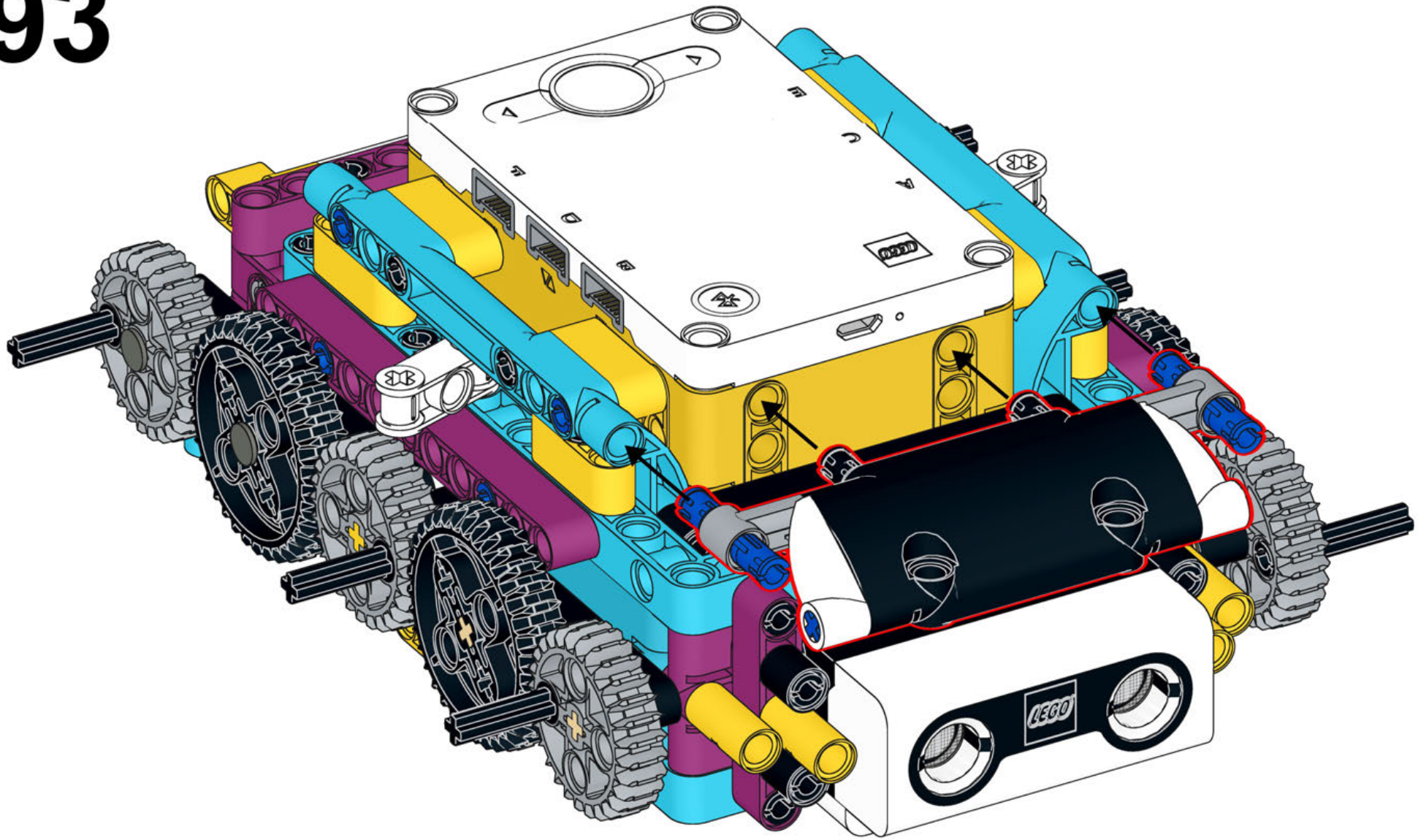

Push the cables along the SPIKE hub
so that you can attach this cover plate.

94

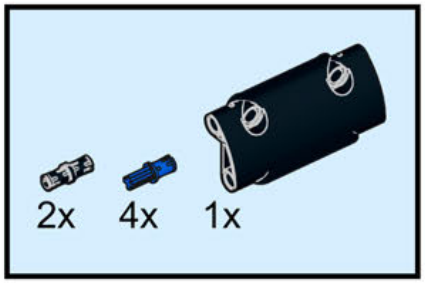

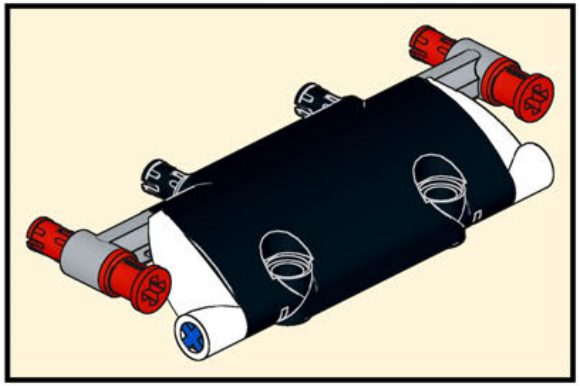

95

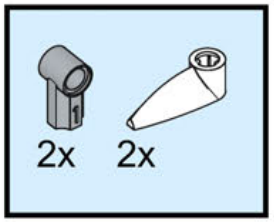

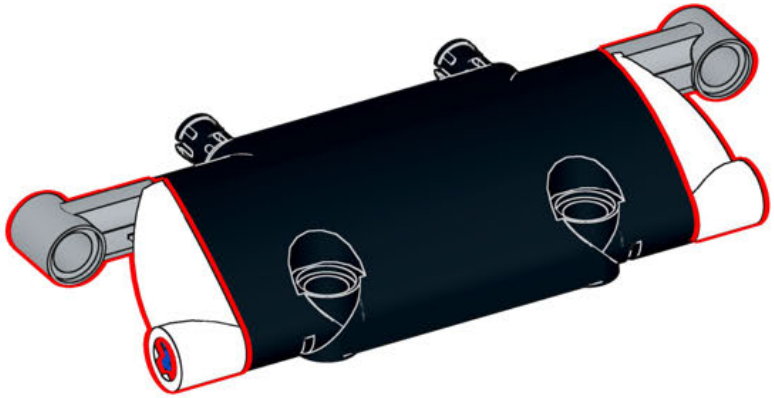

If you don't have 6 of these white toothpieces, you can use 2 of those black rubber pieces instead.

96

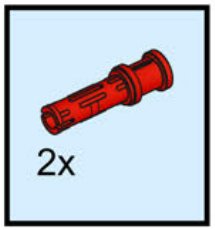

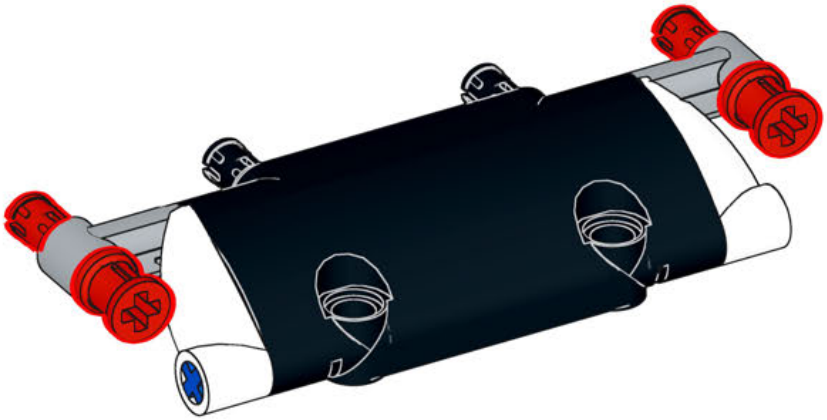

97

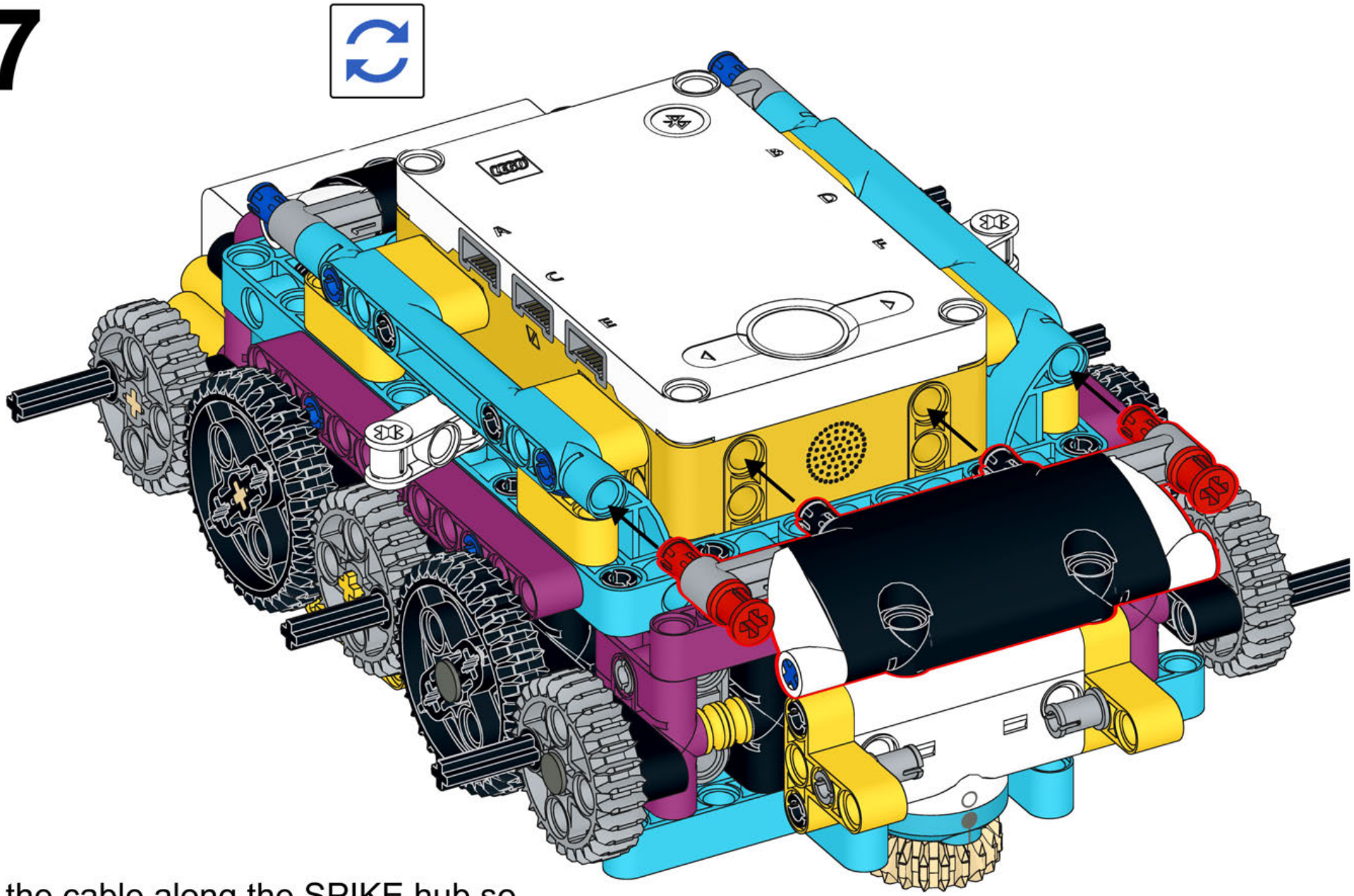

Push the cable along the SPIKE hub so that you can attach this cover plate.

98

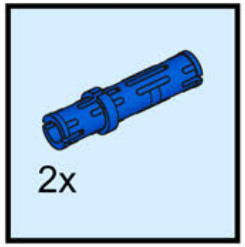

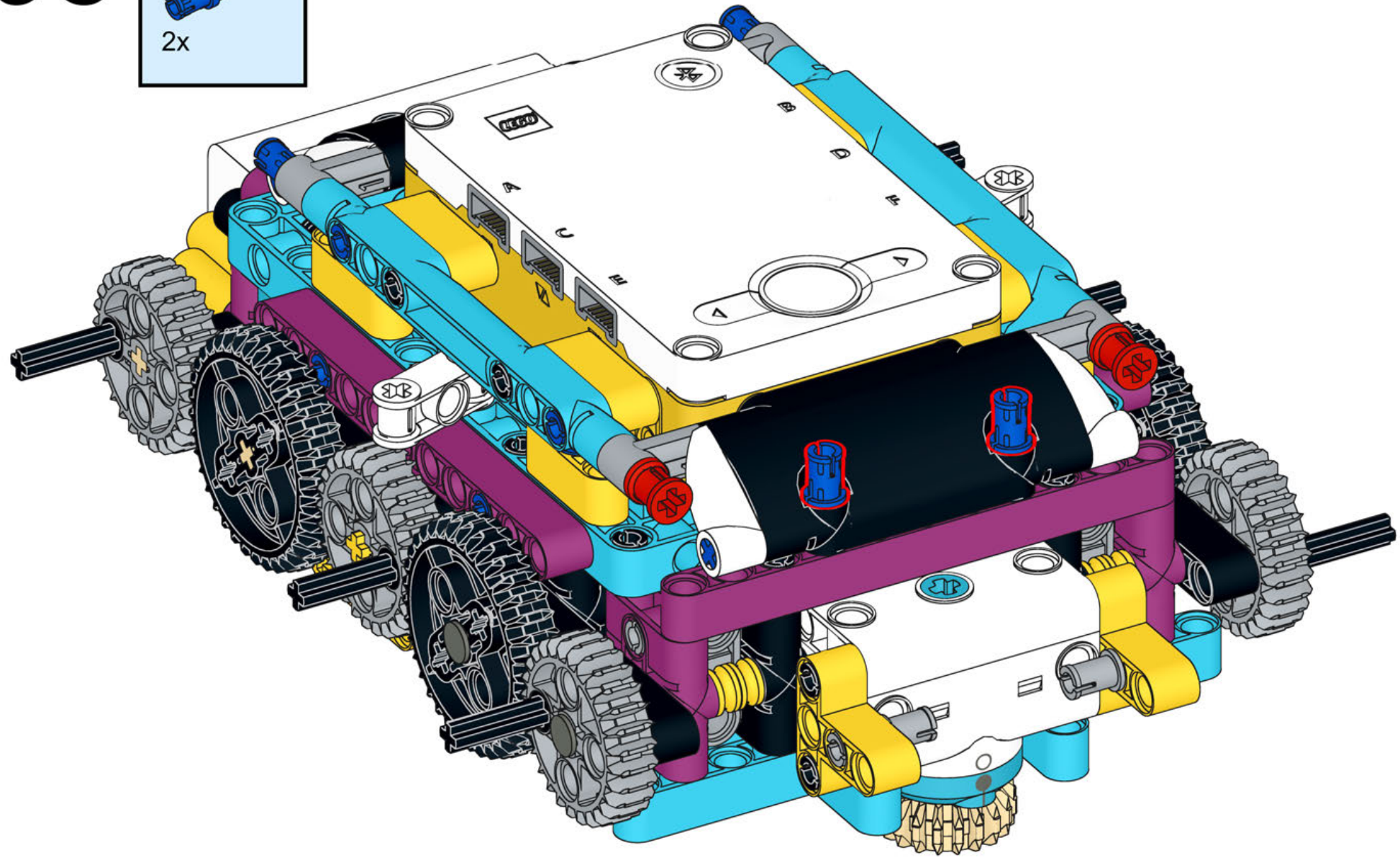

99

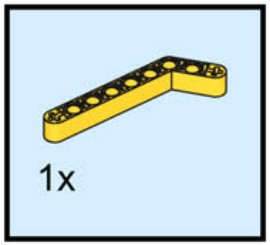

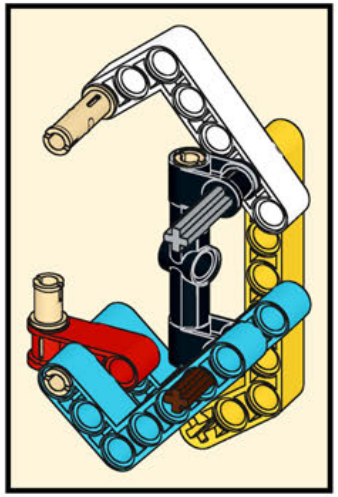

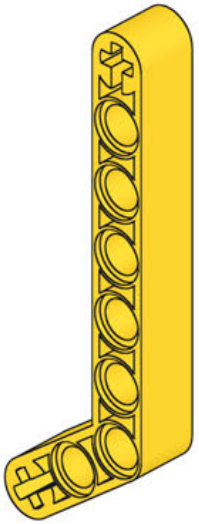

100

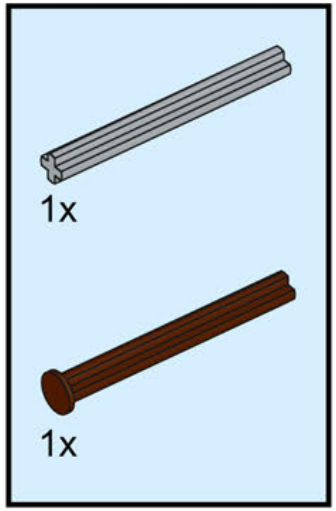

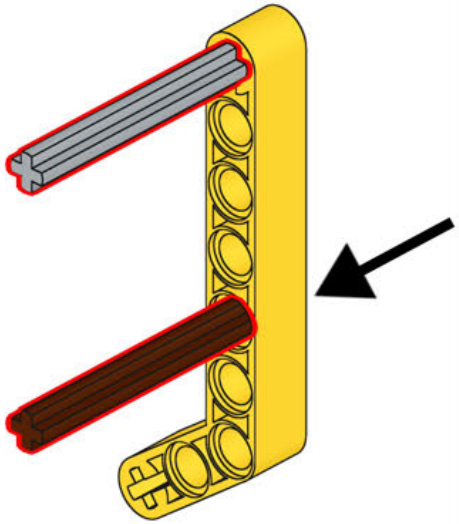

101

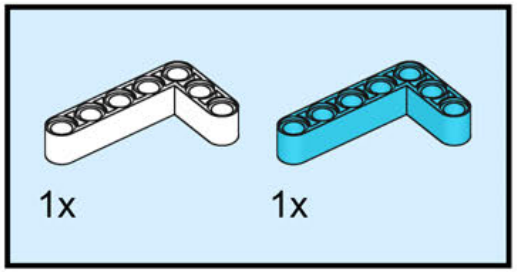

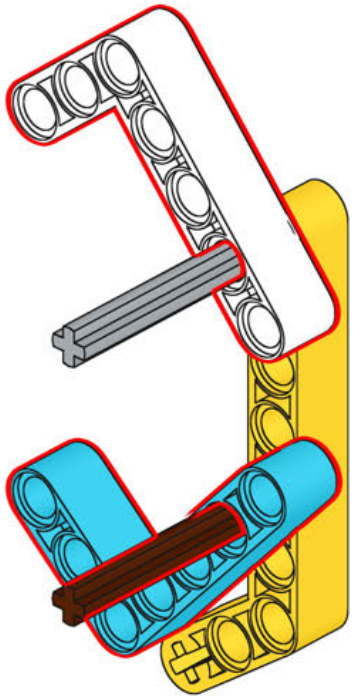

102

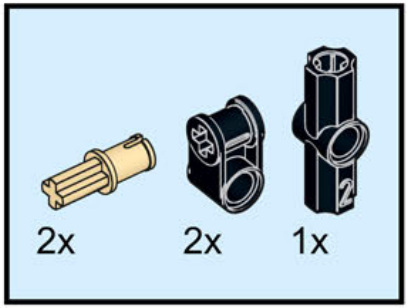

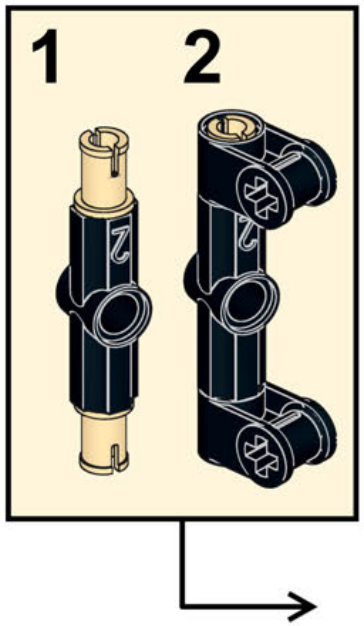

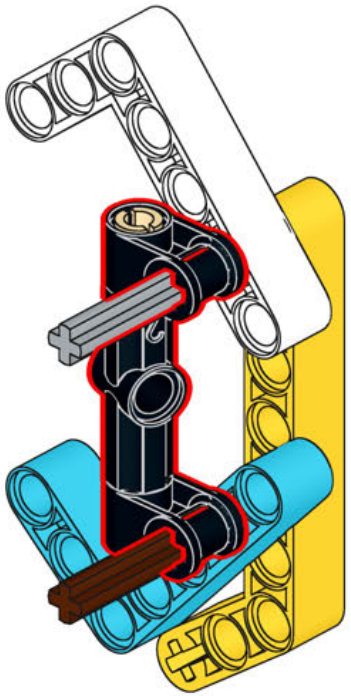

103

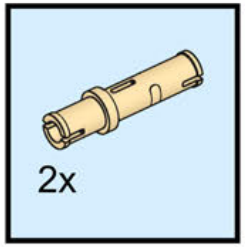

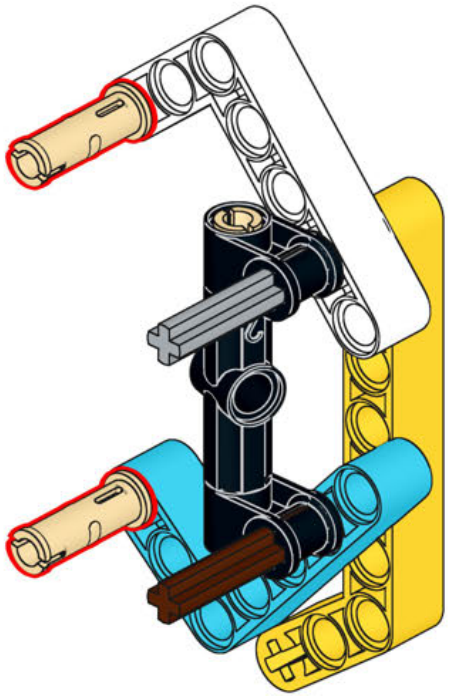

104

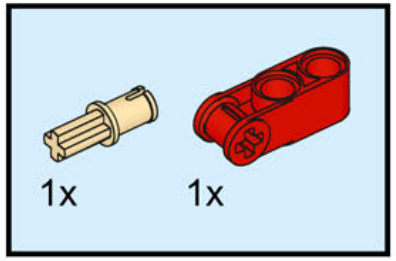

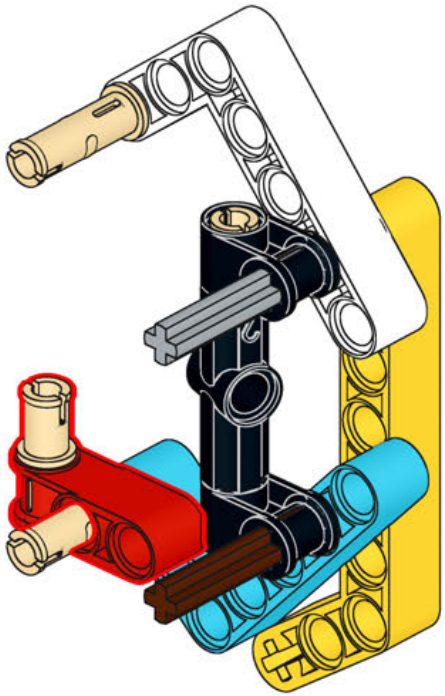

105

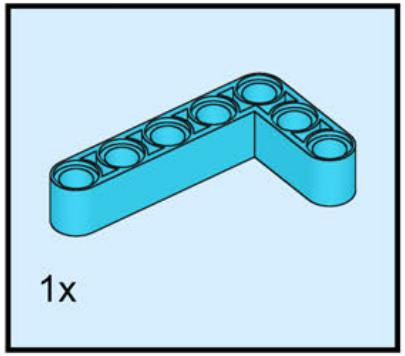

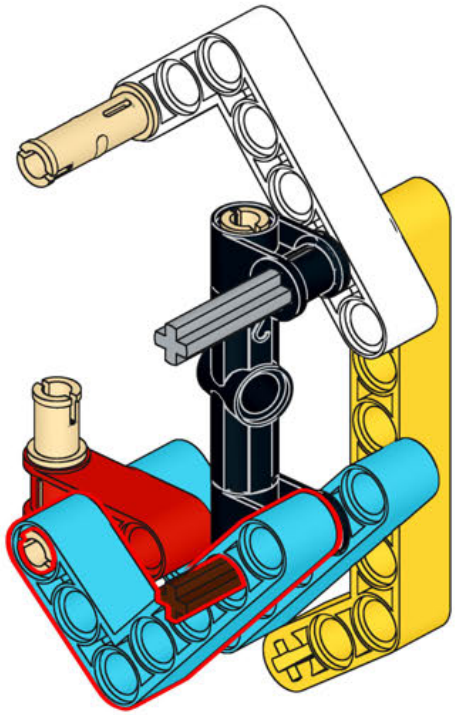

106

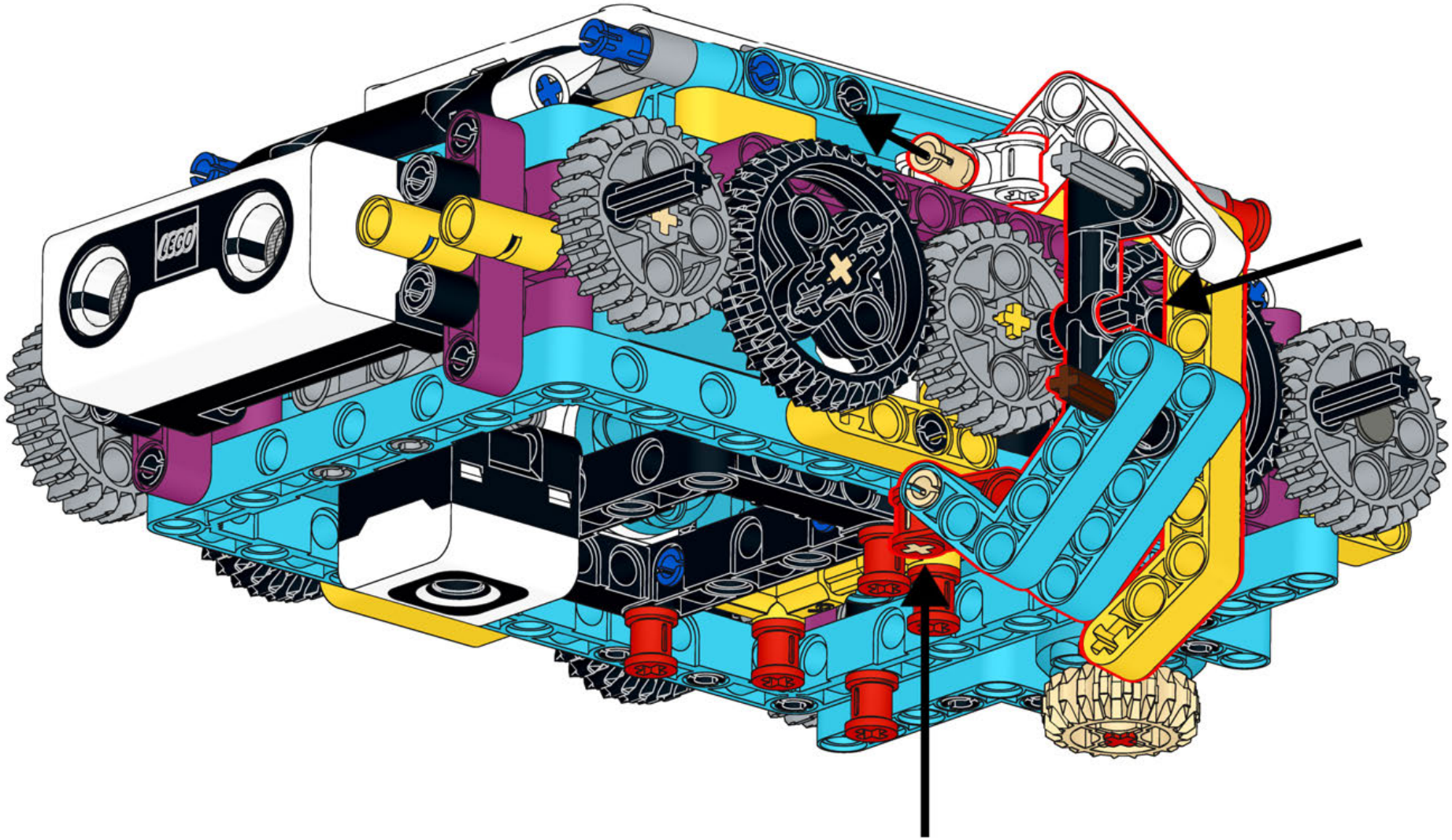

107

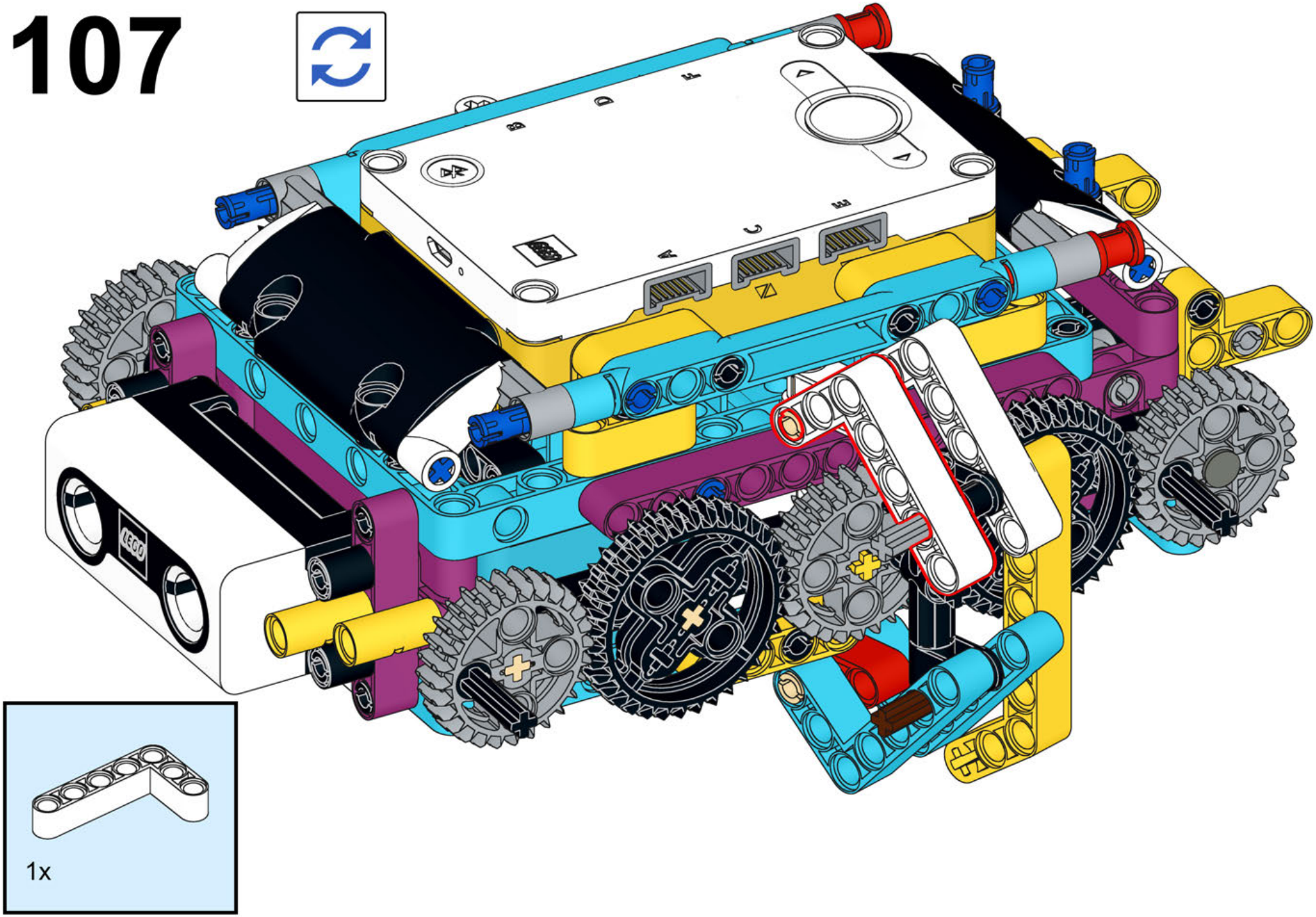

108

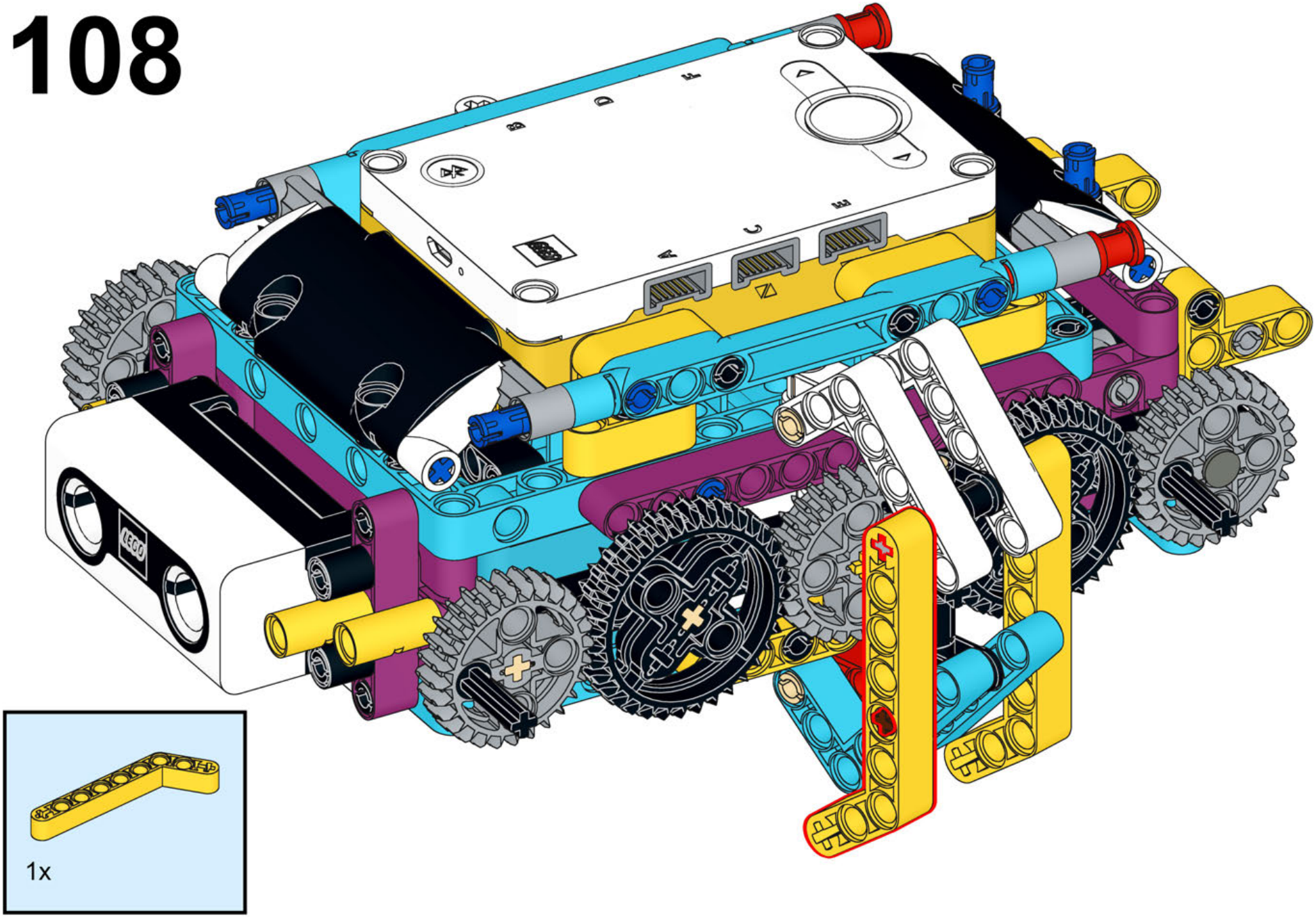

109

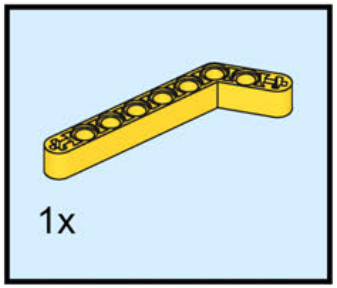

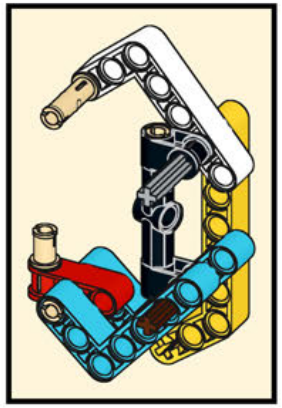

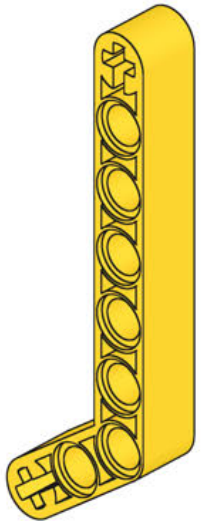

110

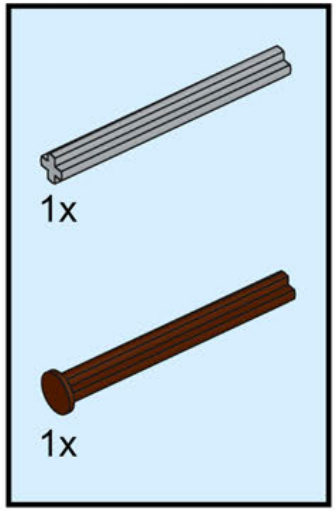

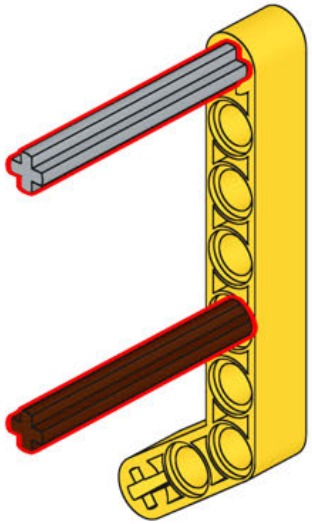

111

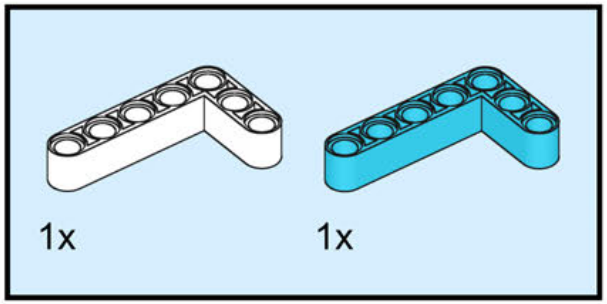

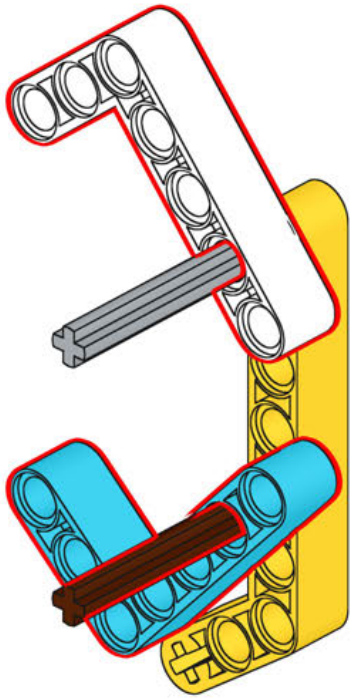

112

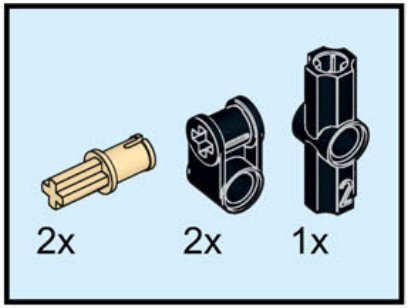

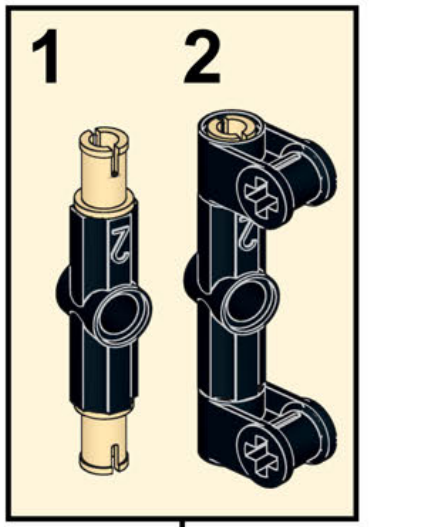

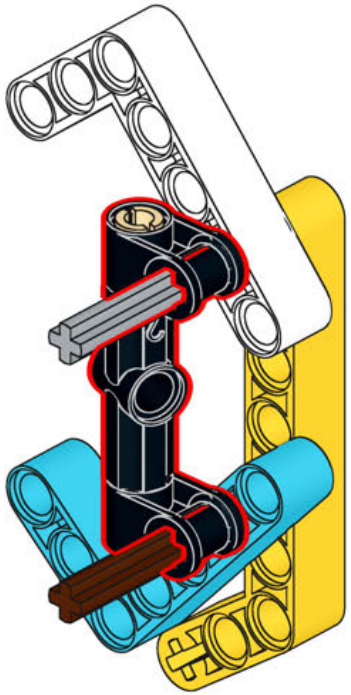

113

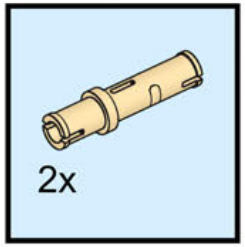

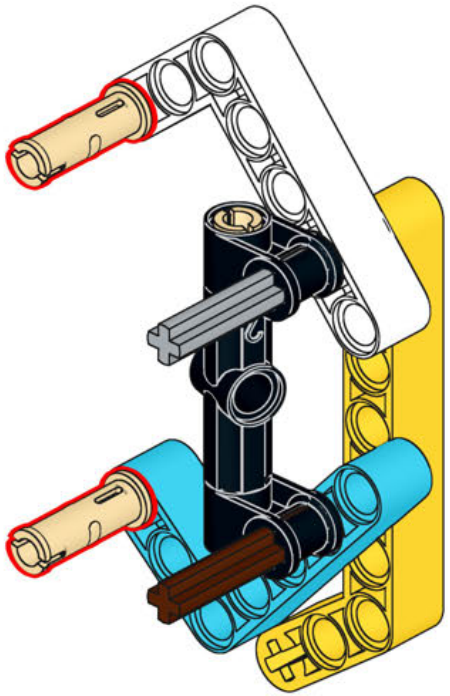

114

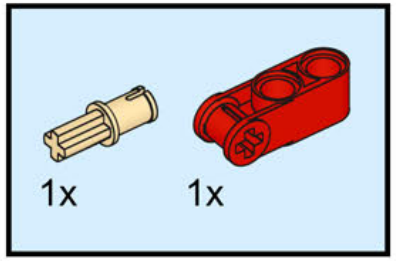

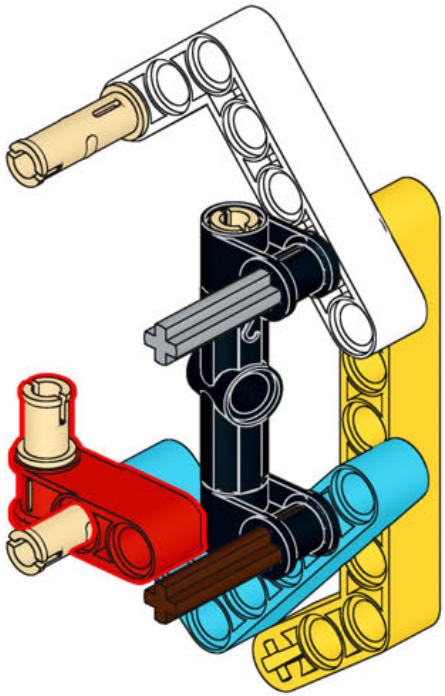

115

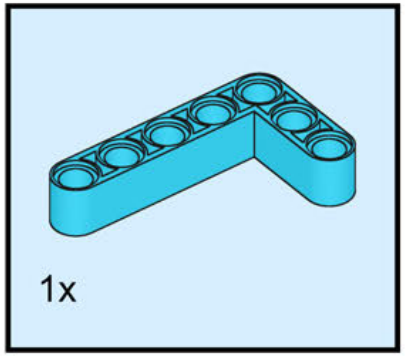

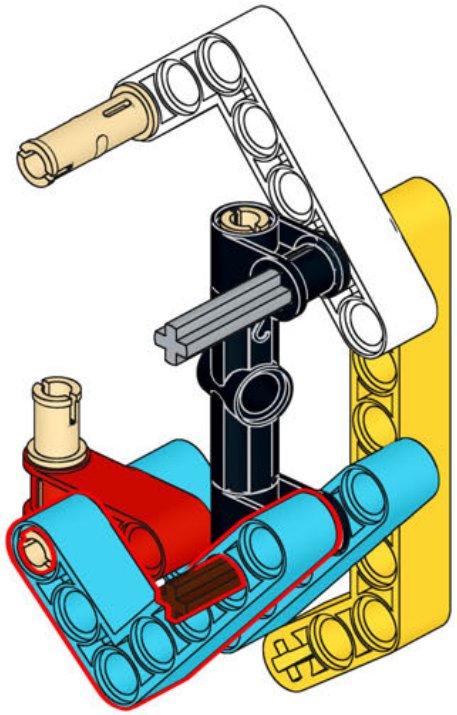

116

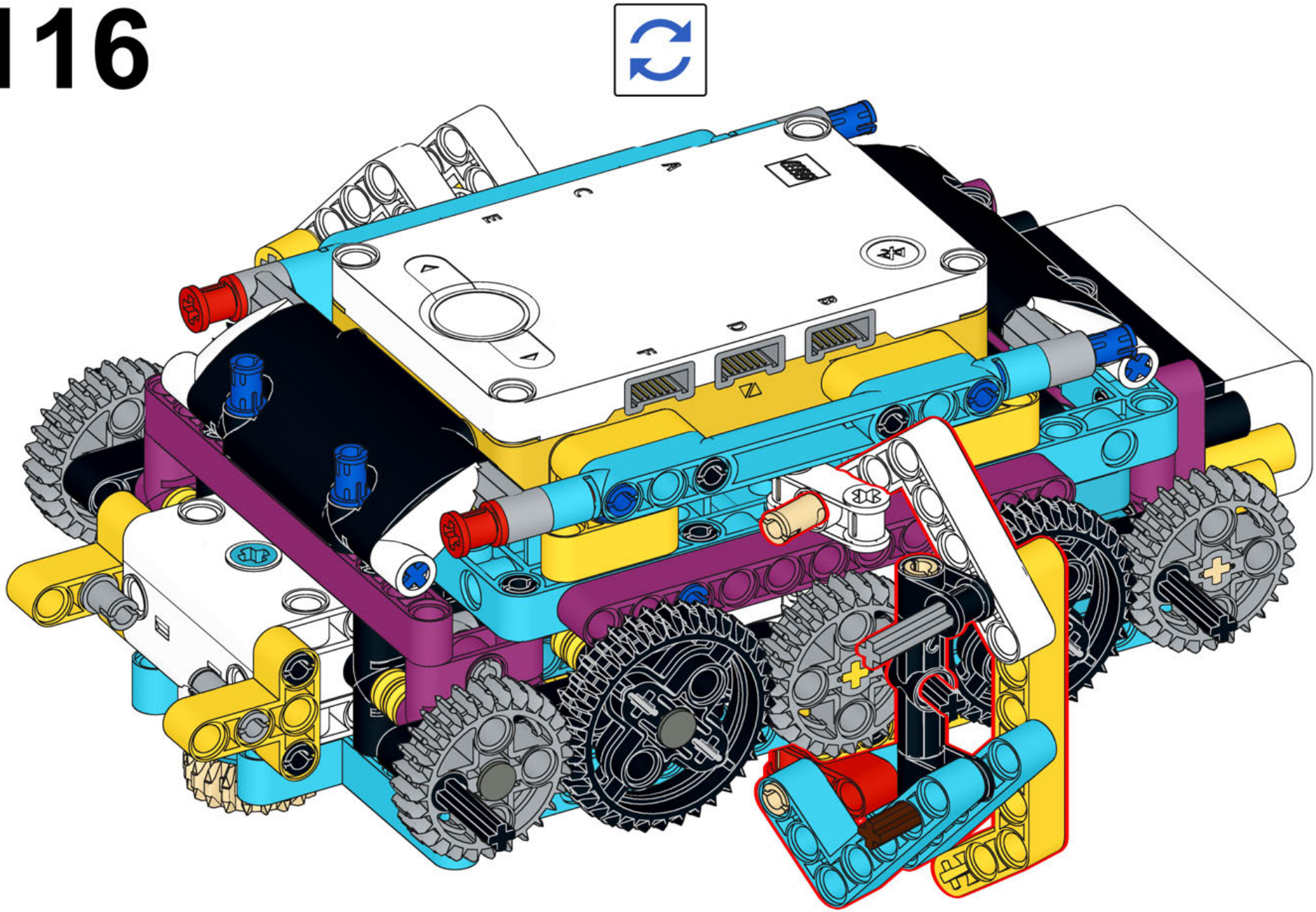

117

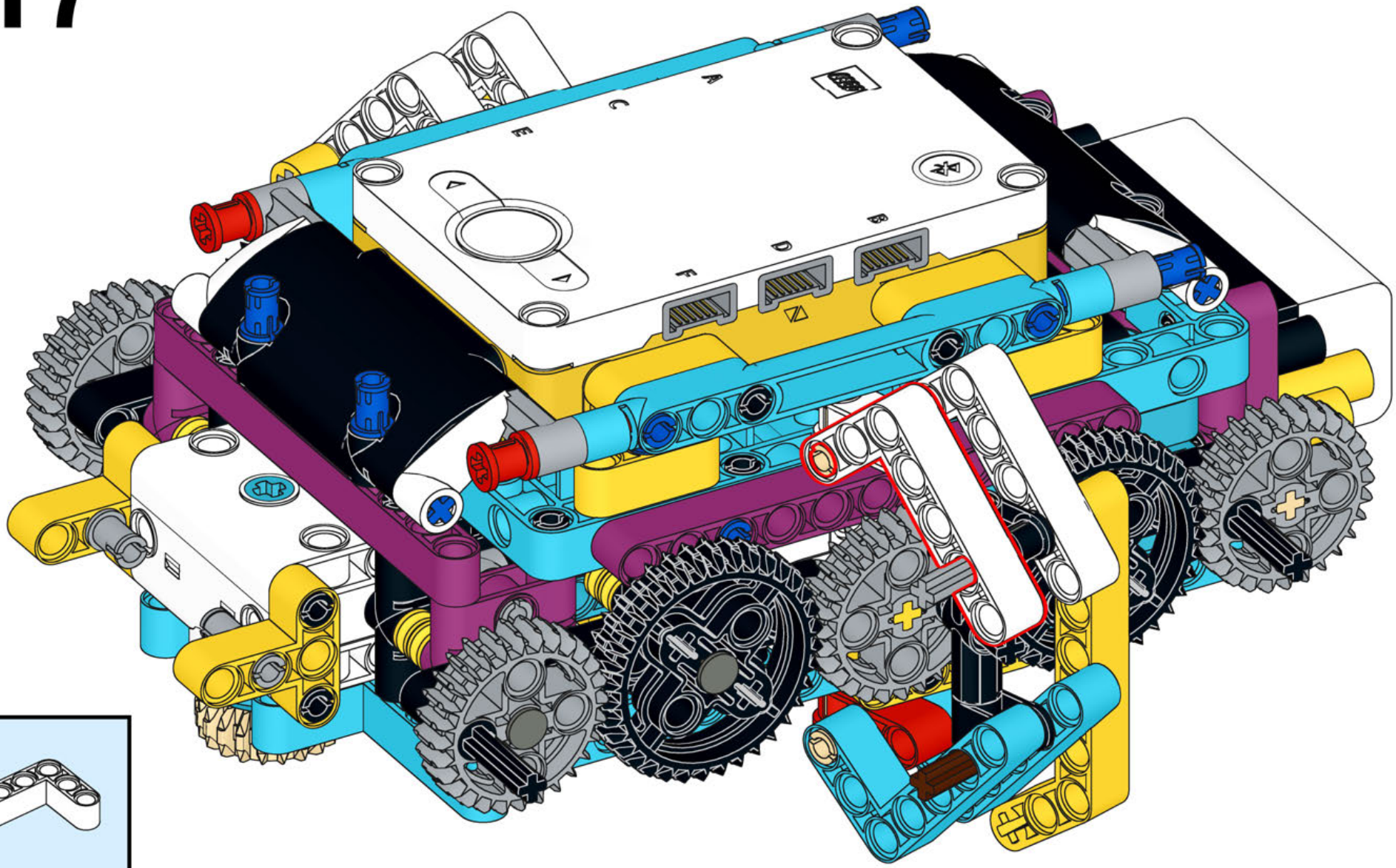

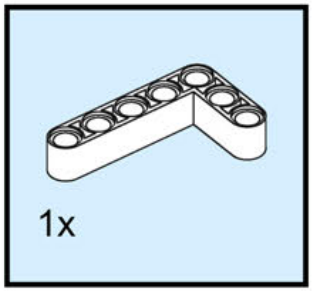

118

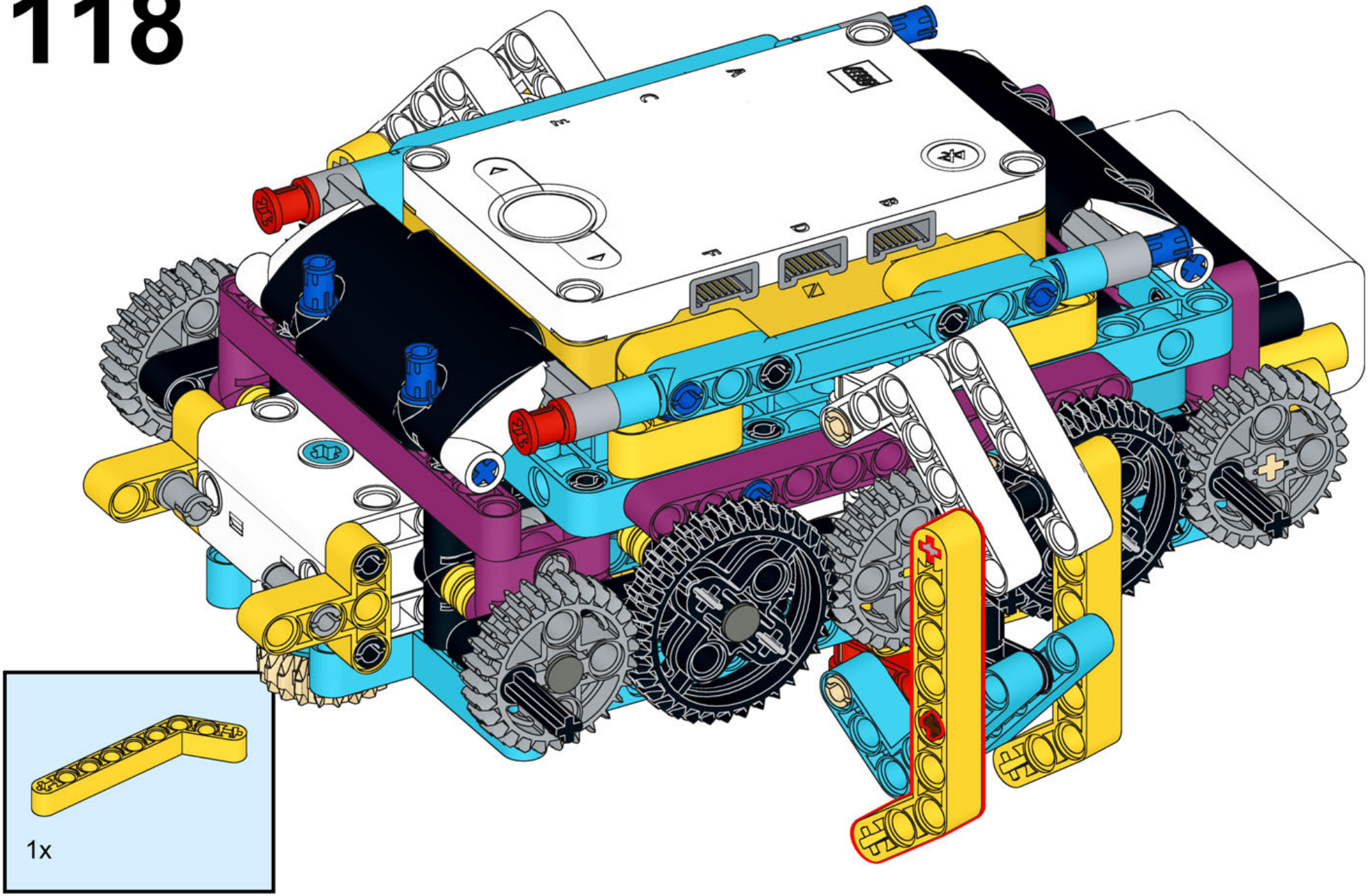

119

2x

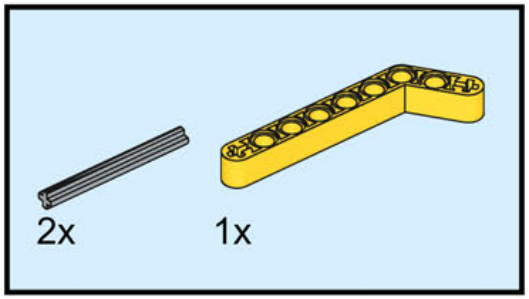

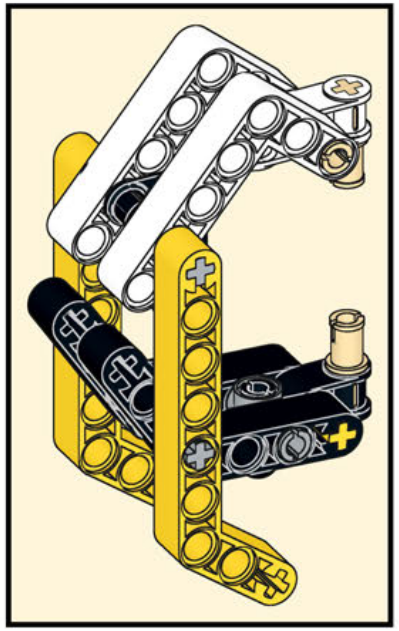

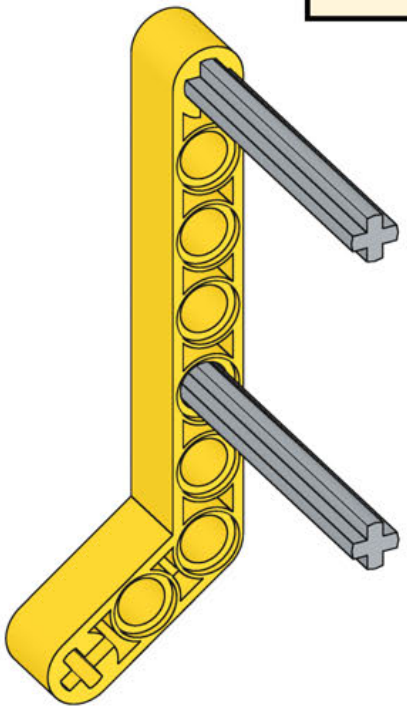

120

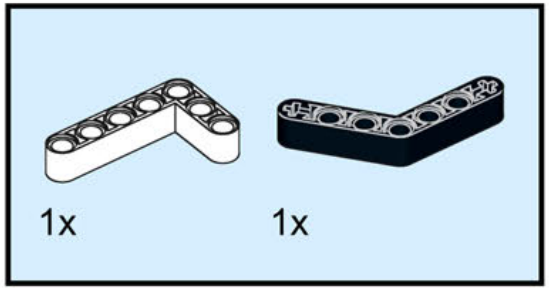

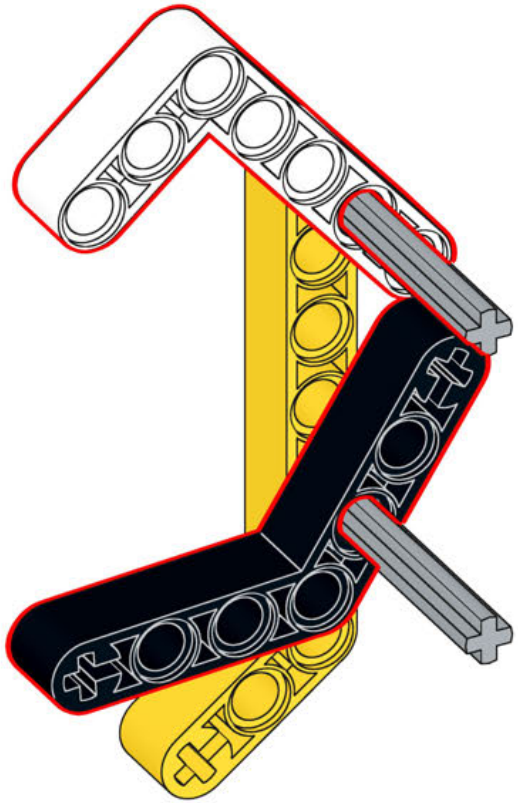

121

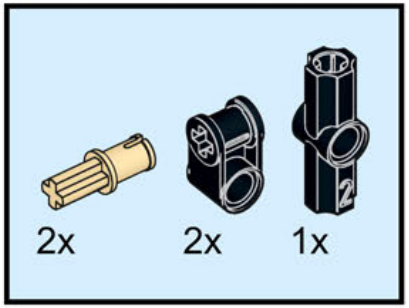

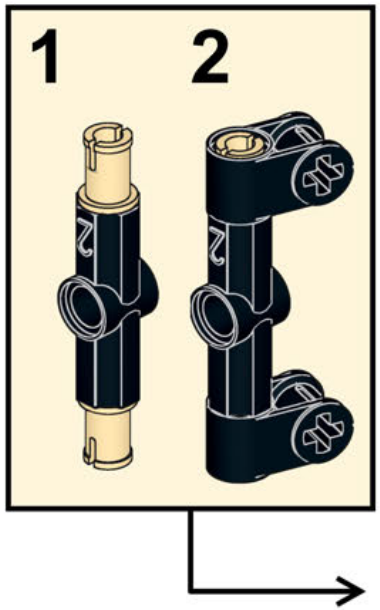

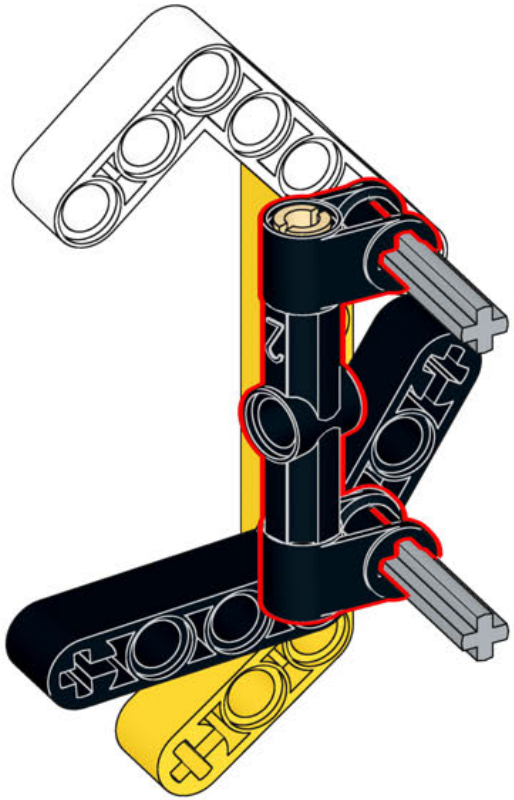

122

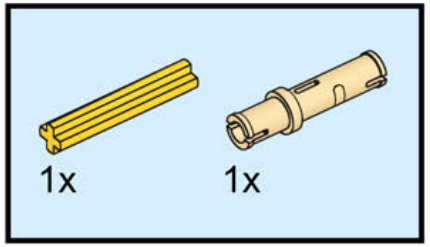

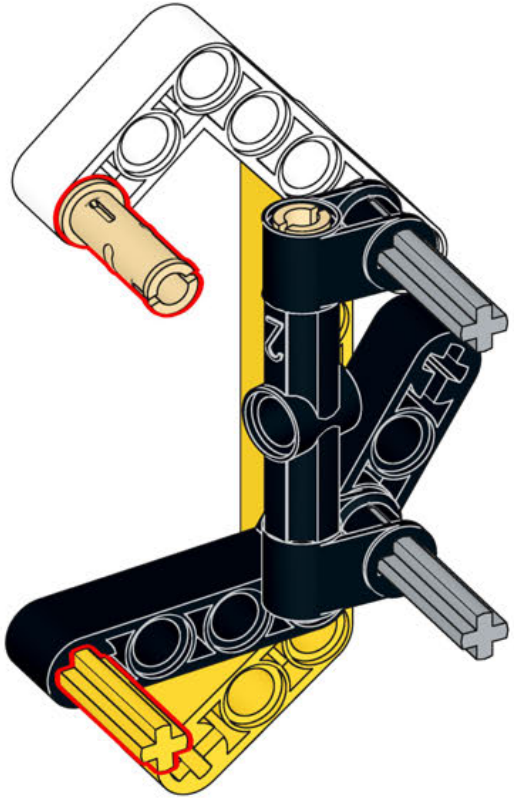

123

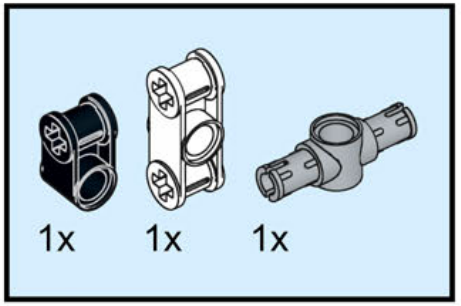

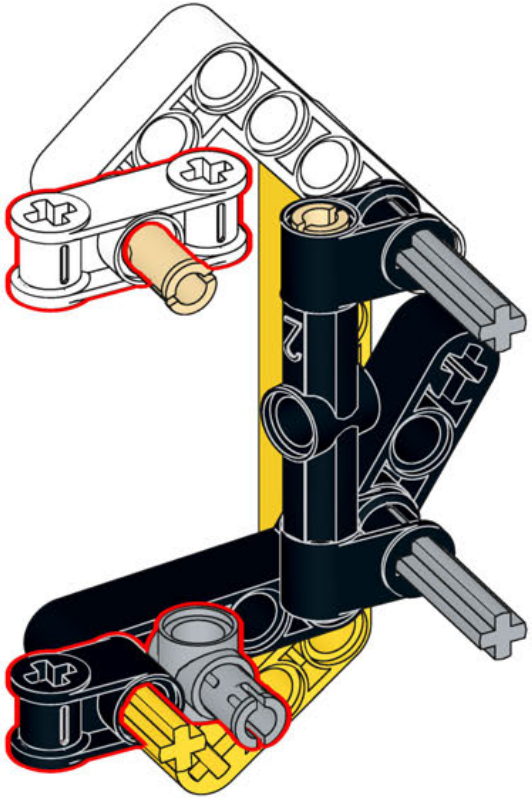

124

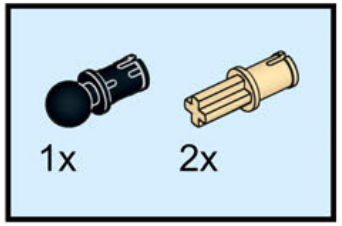

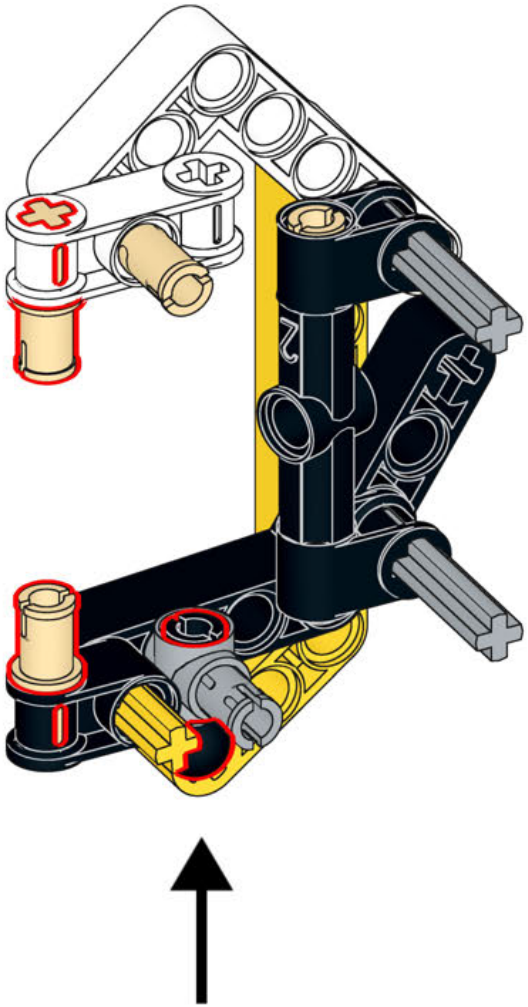

125

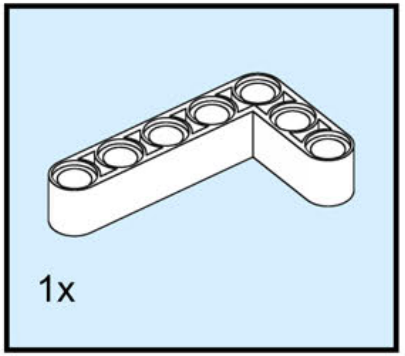

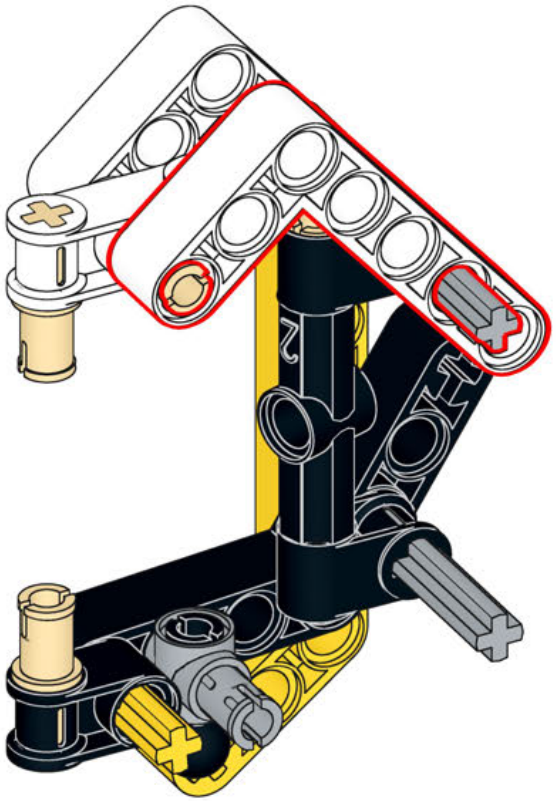

126

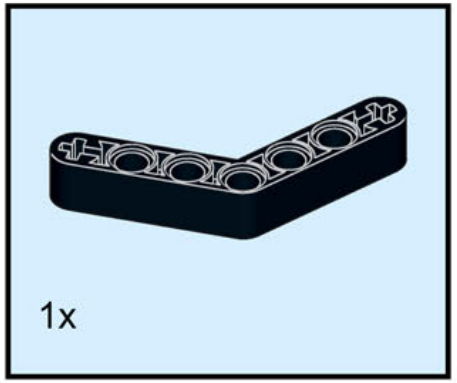

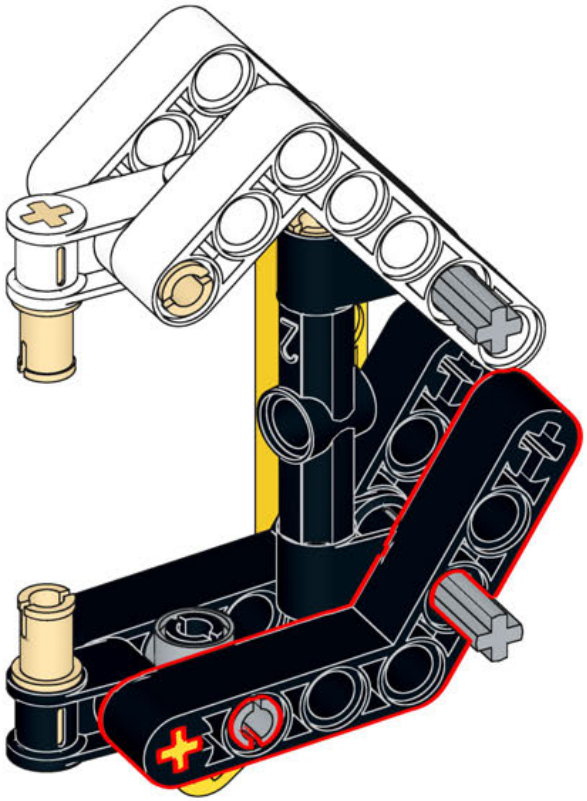

127

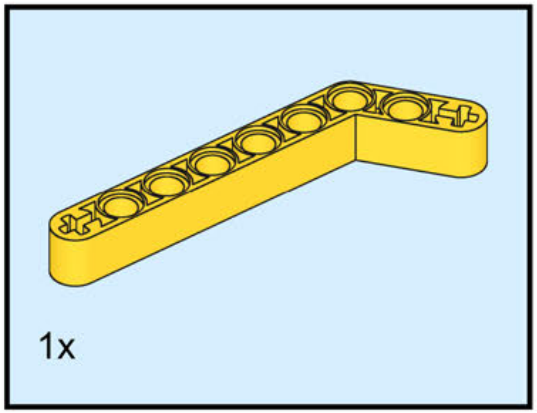

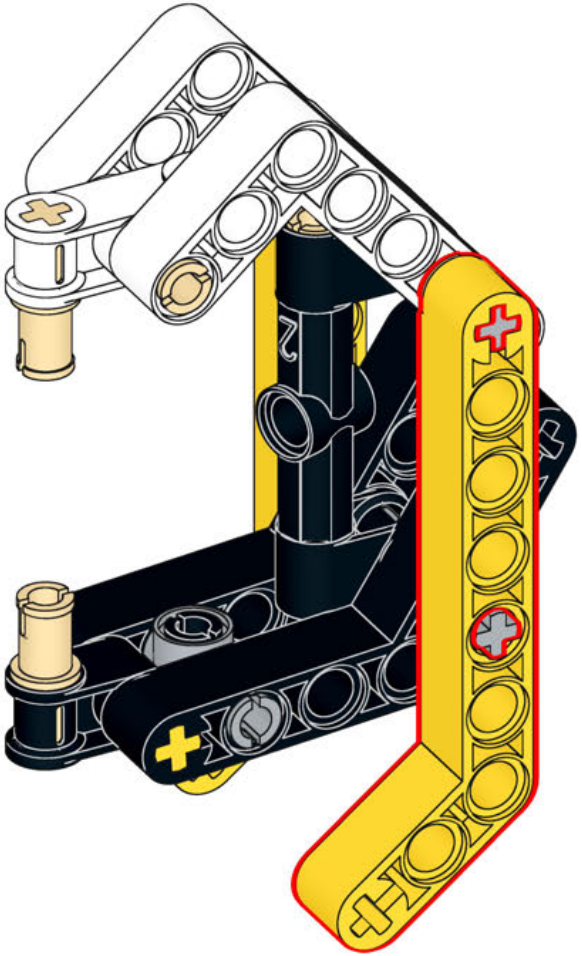

x 2

128

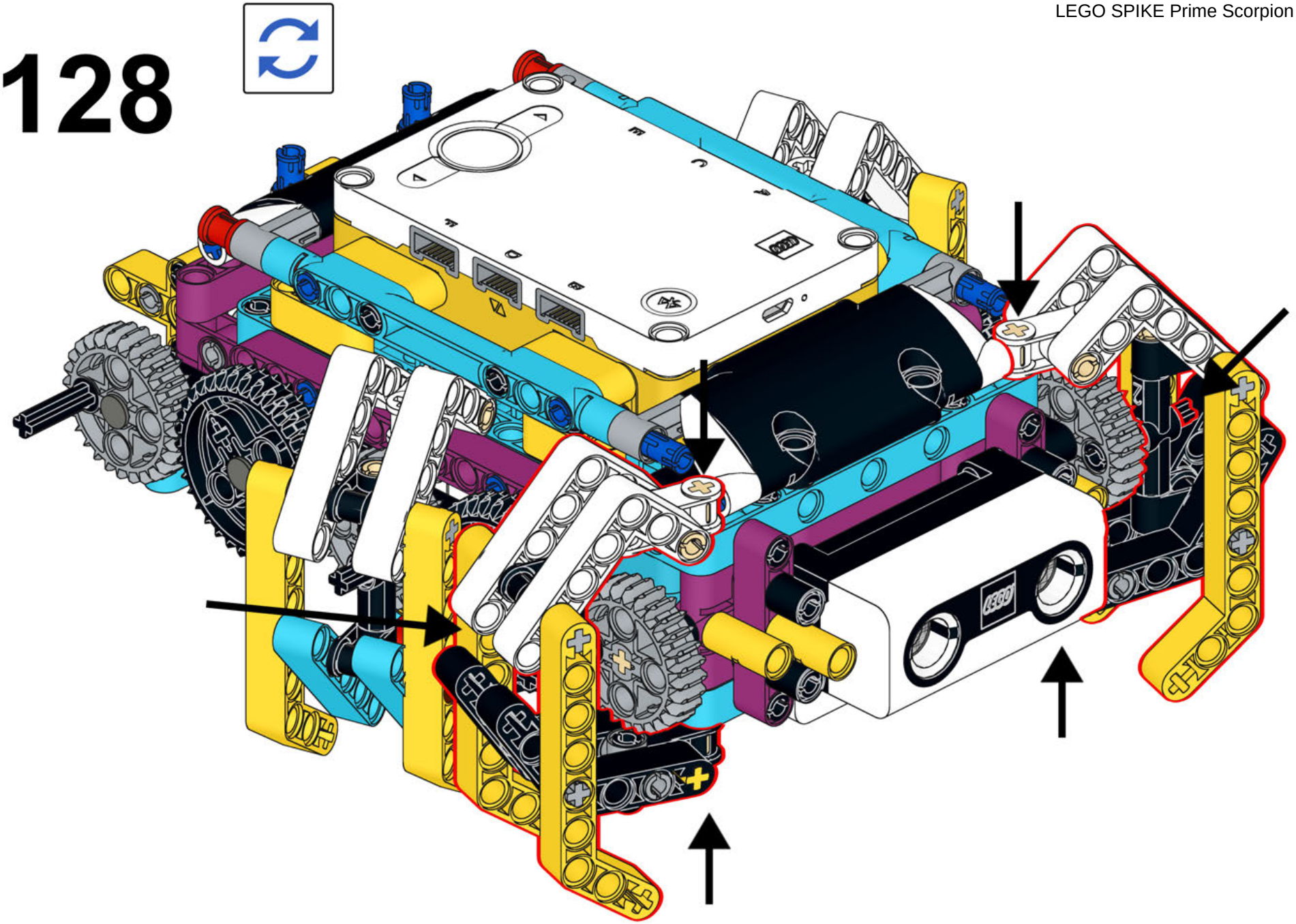

129

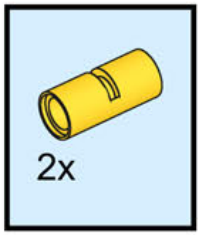

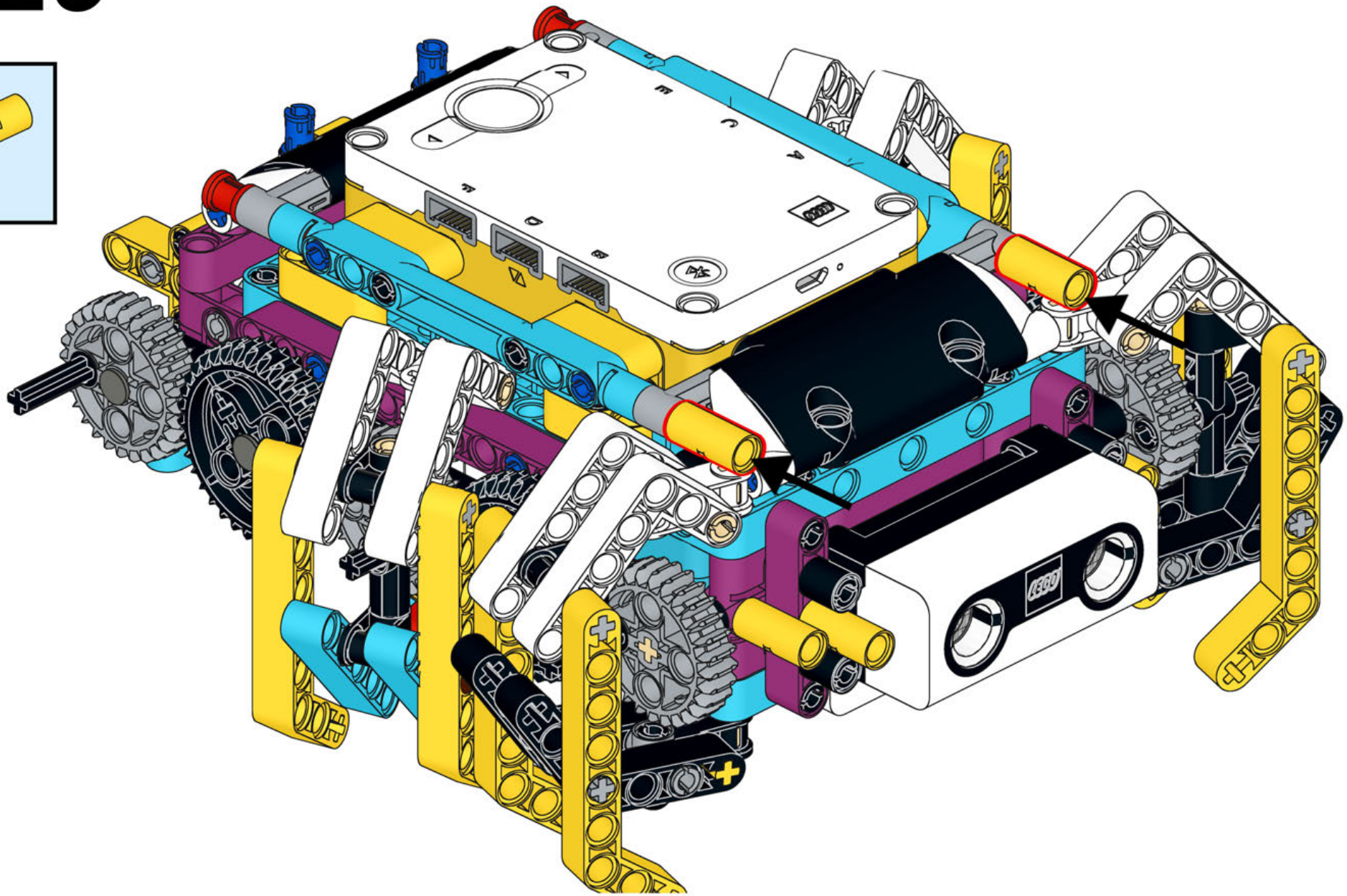

130

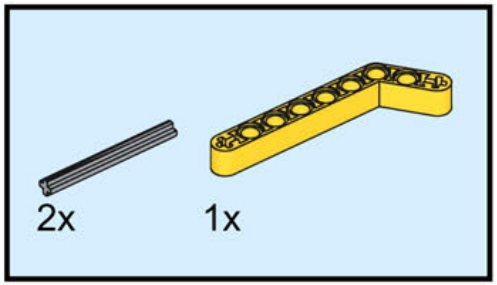

2x

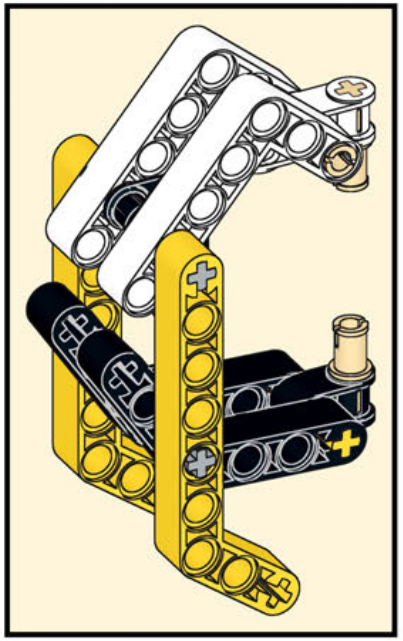

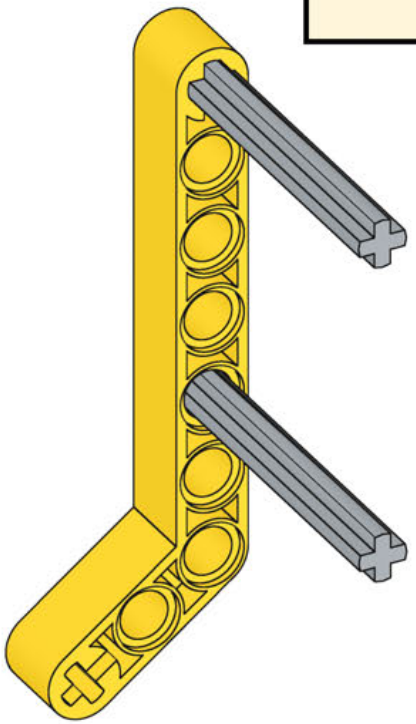

131

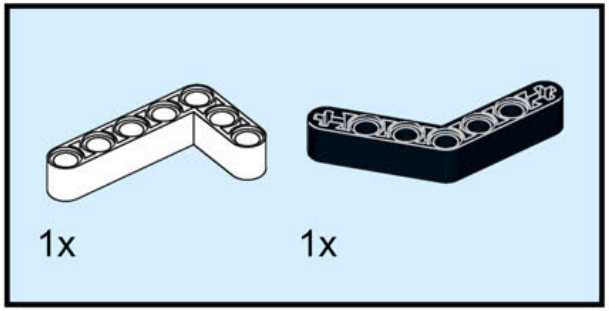

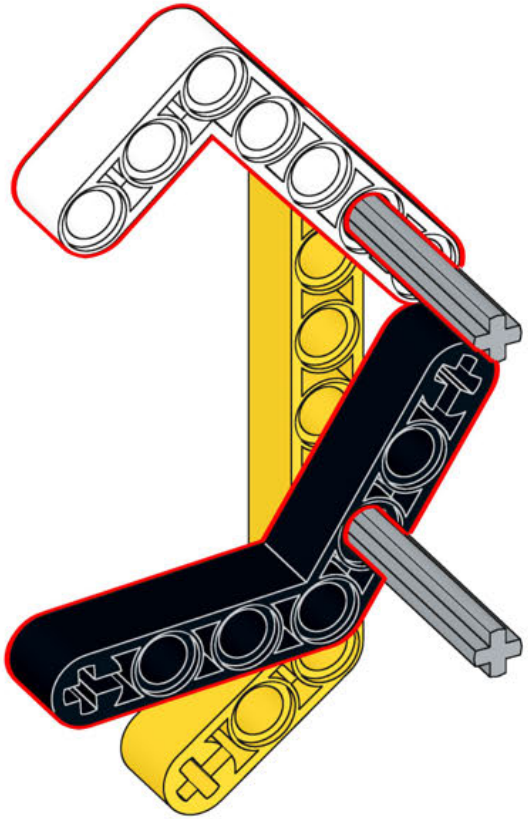

132

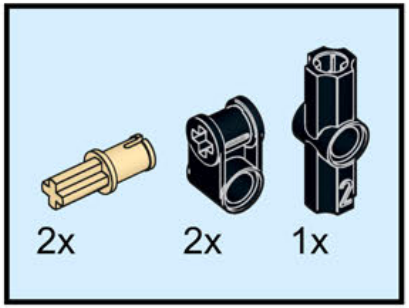

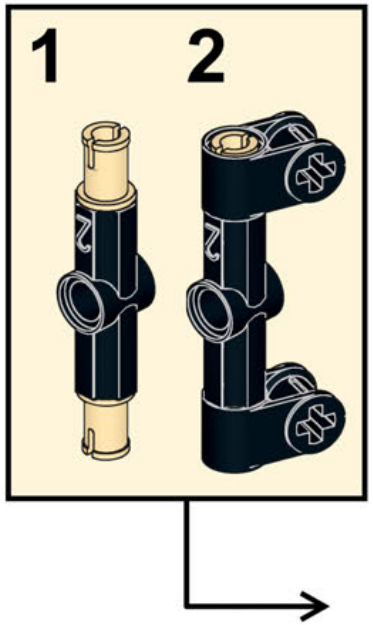

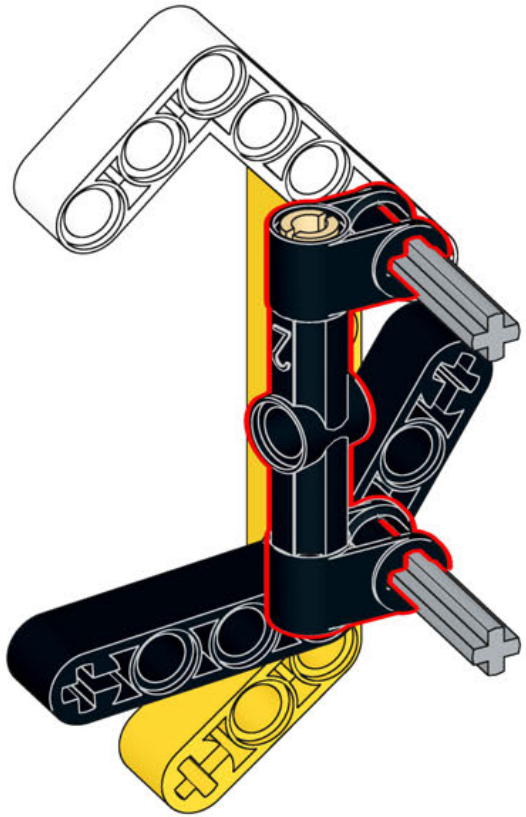

133

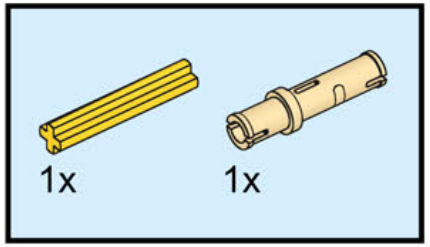

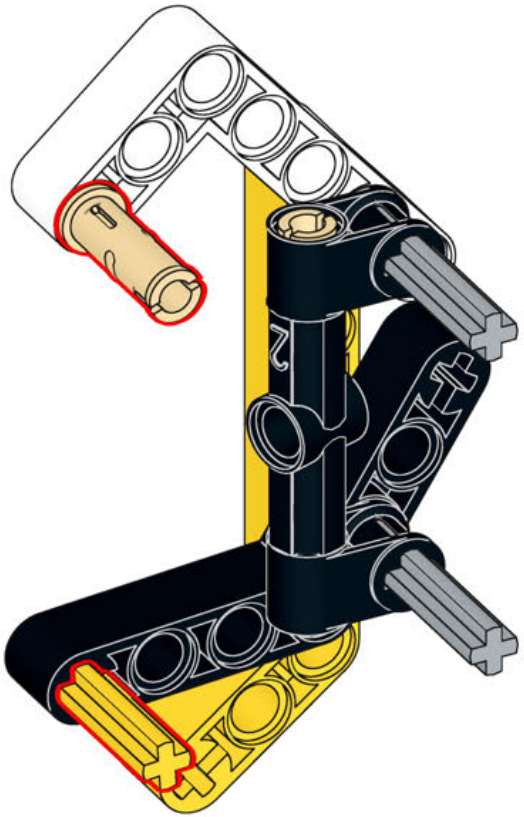

134

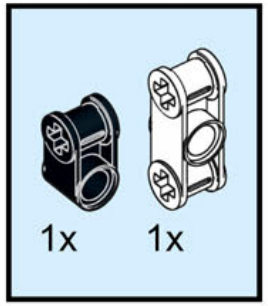

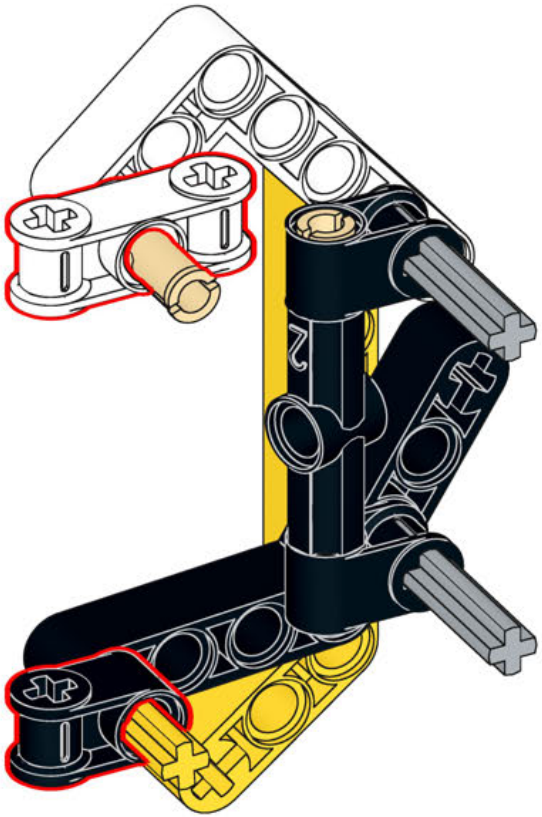

135

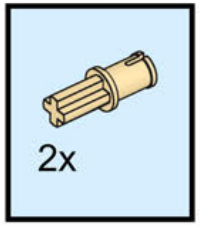

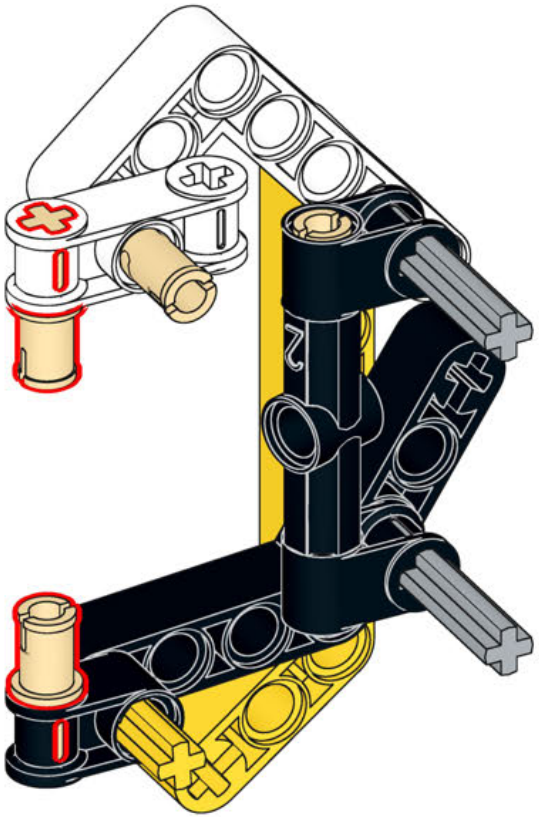

136

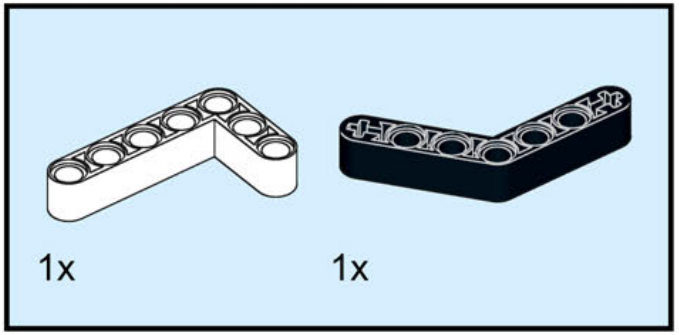

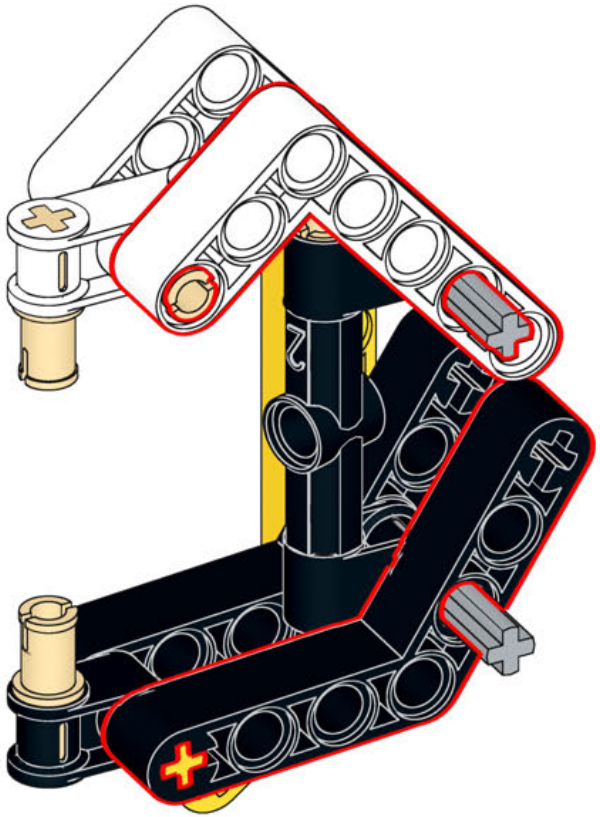

137

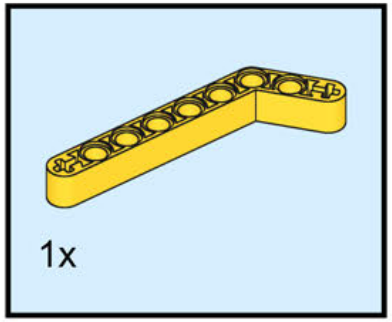

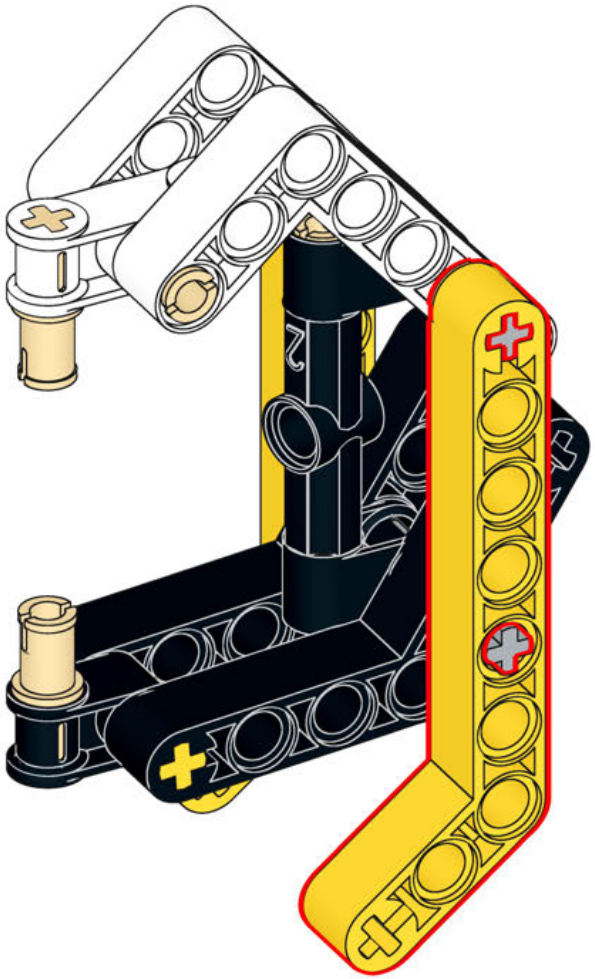

138

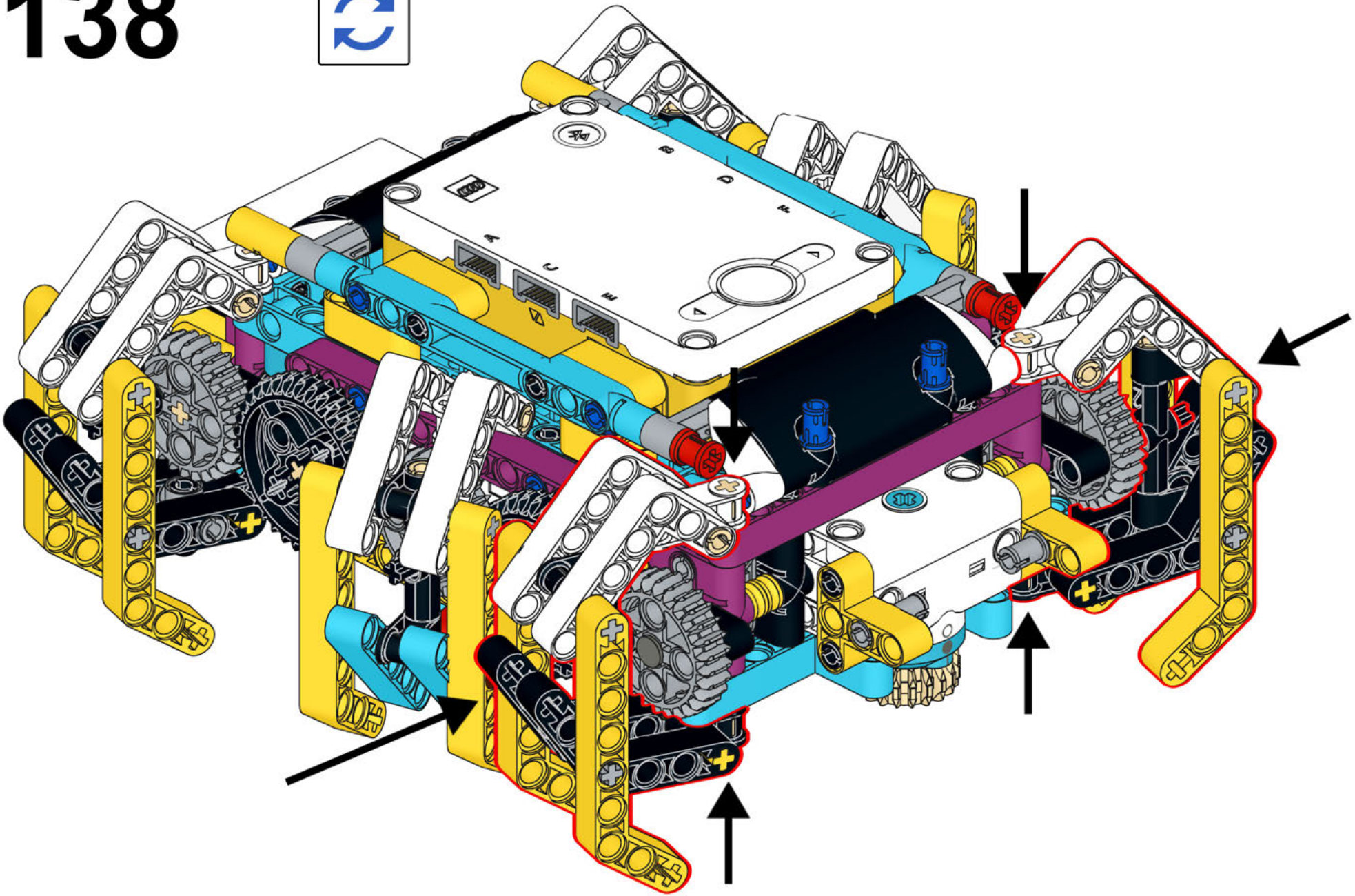

139

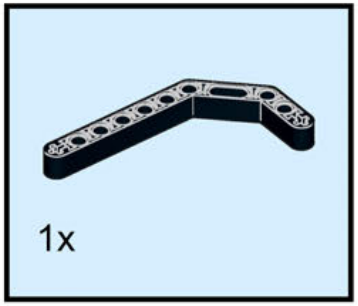

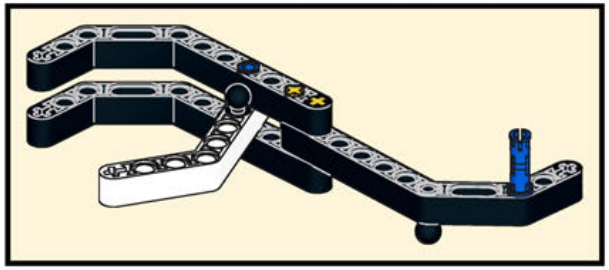

140

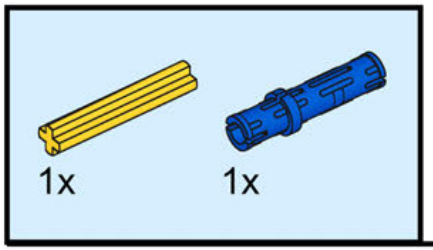

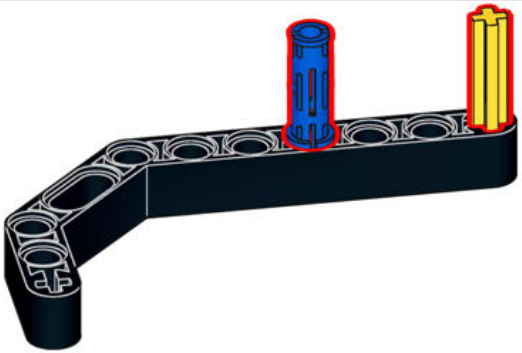

141

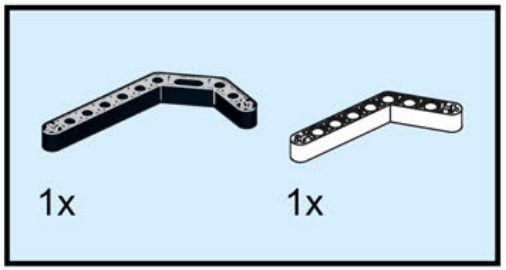

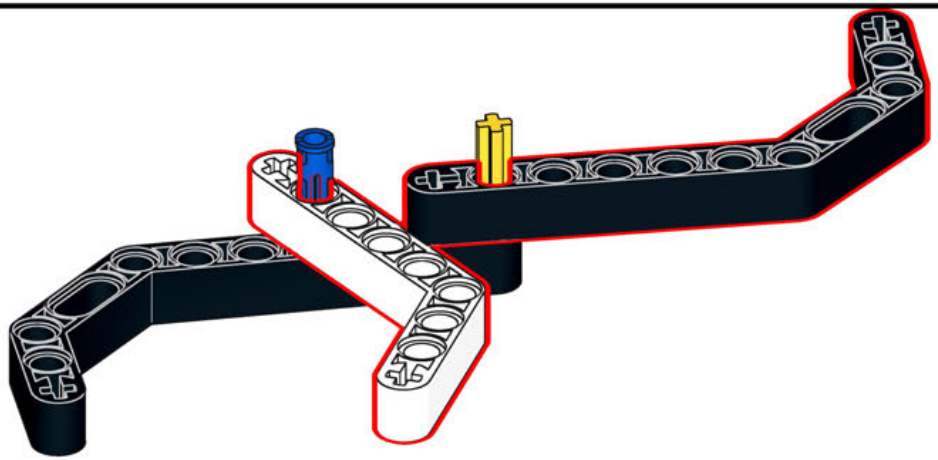

142

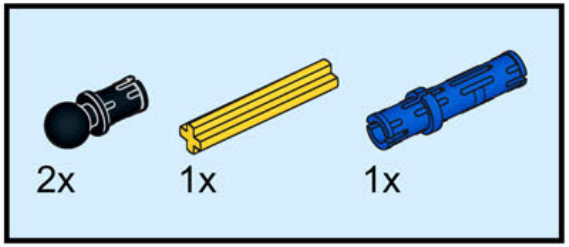

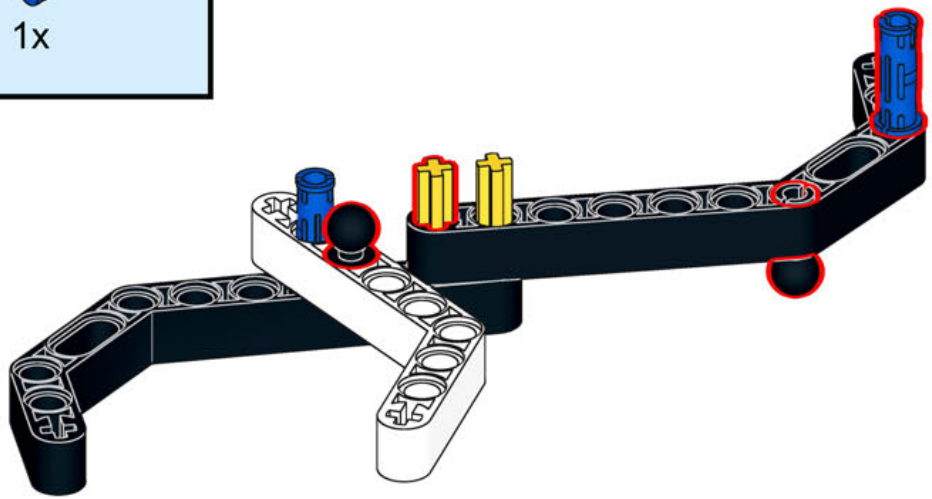

143

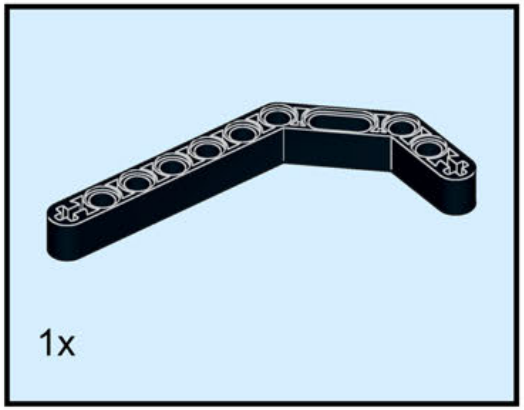

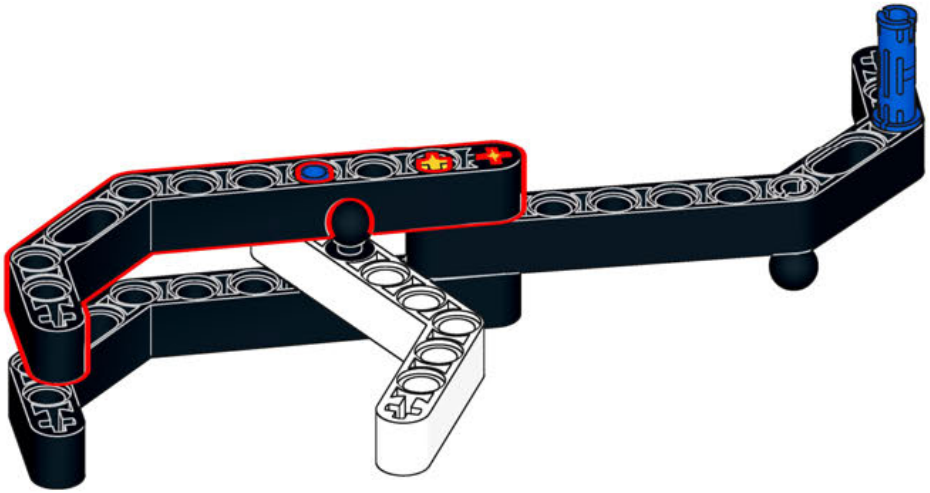

144

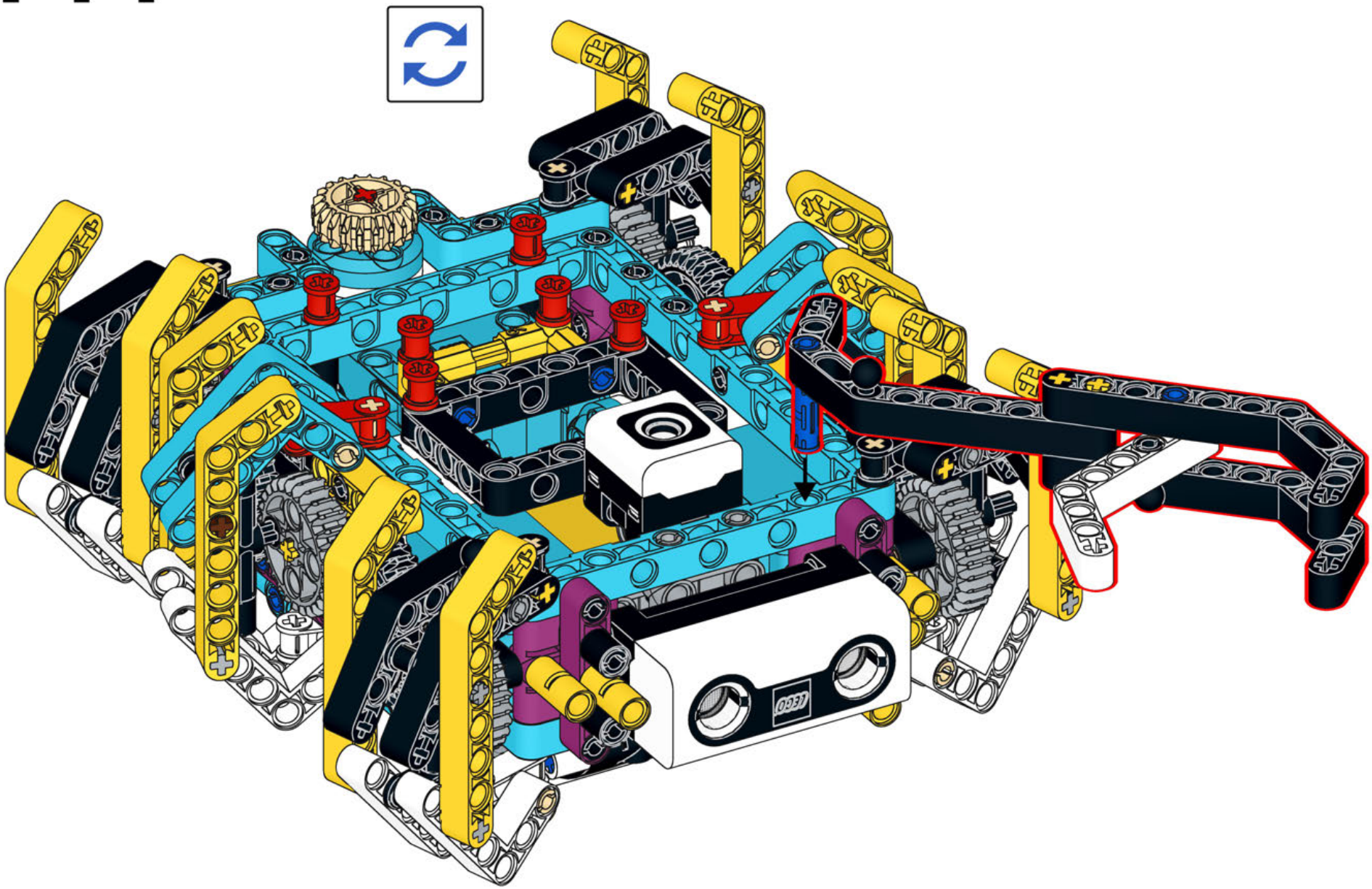

145

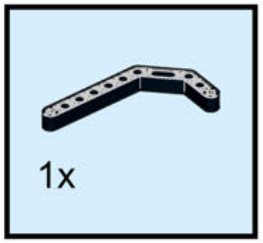

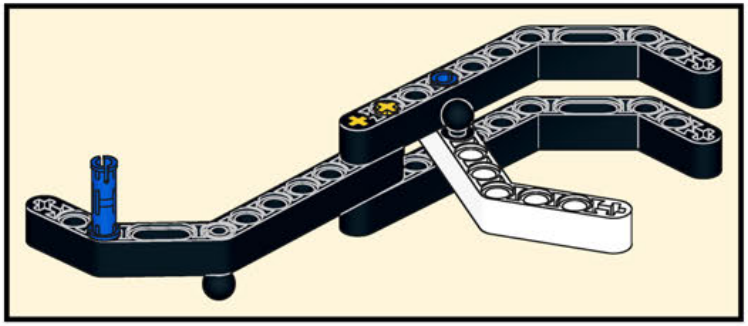

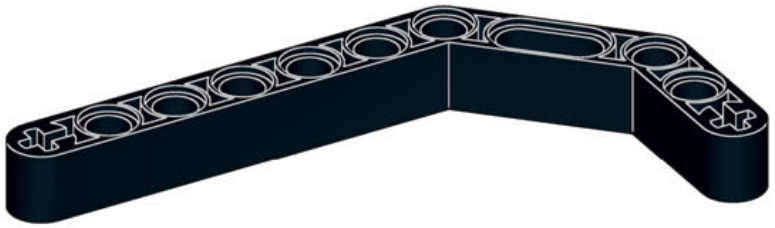

146

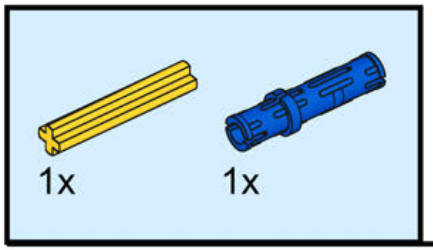

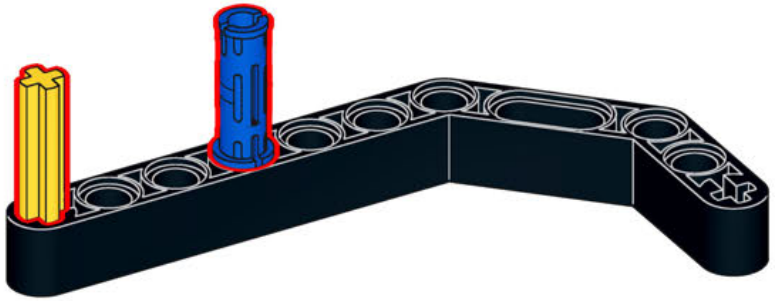

147

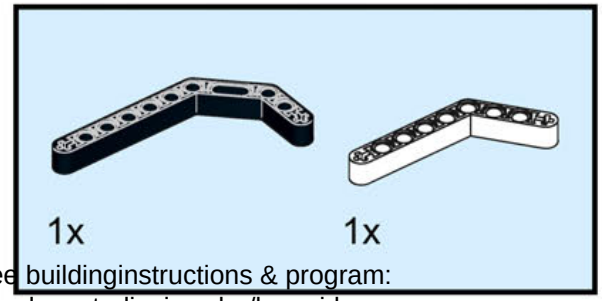

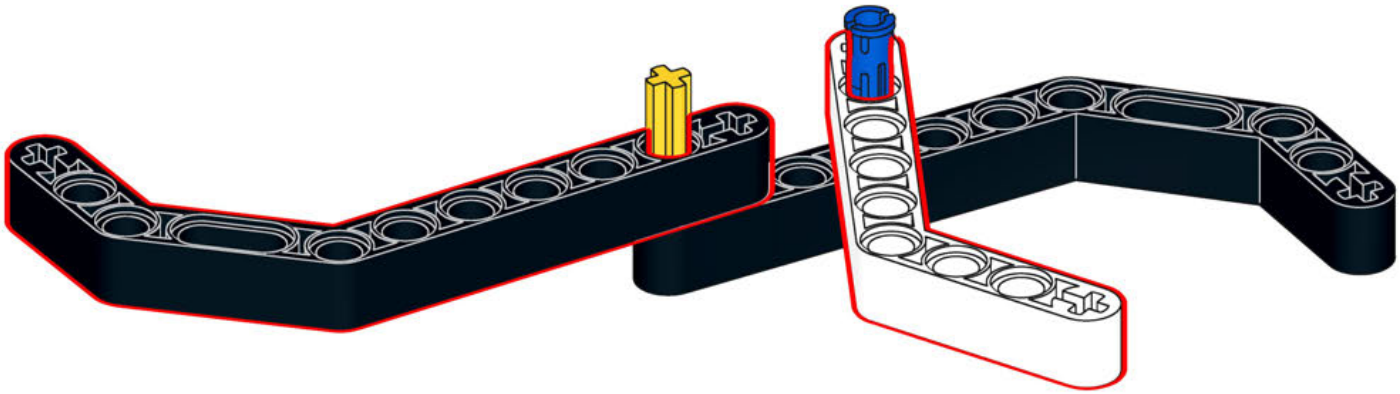

148

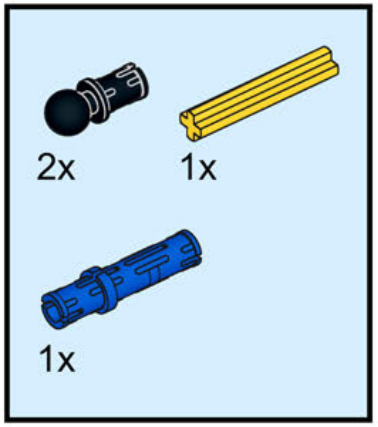

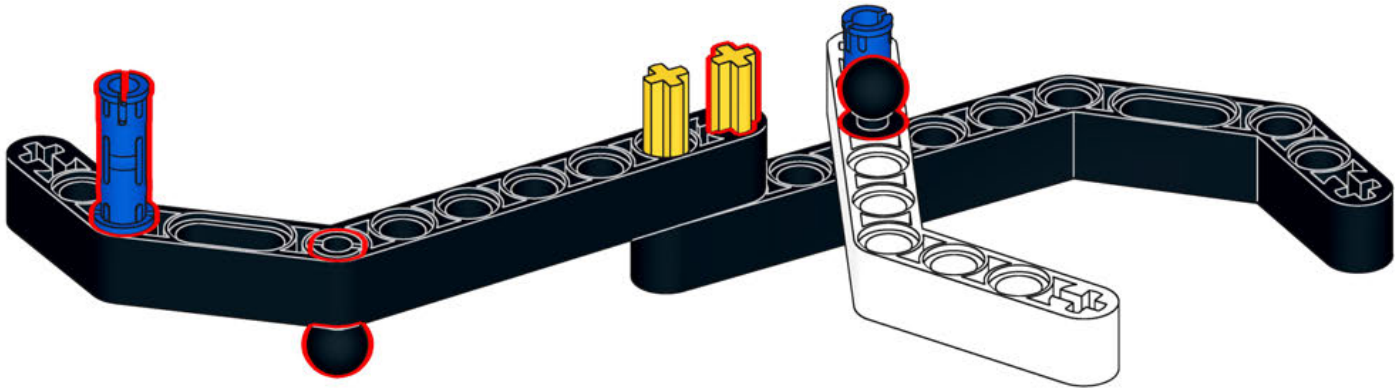

149

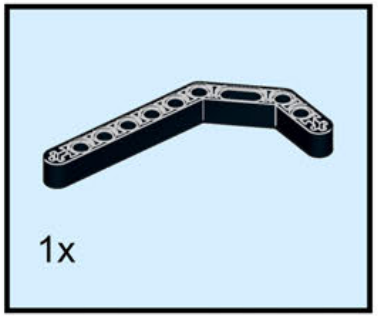

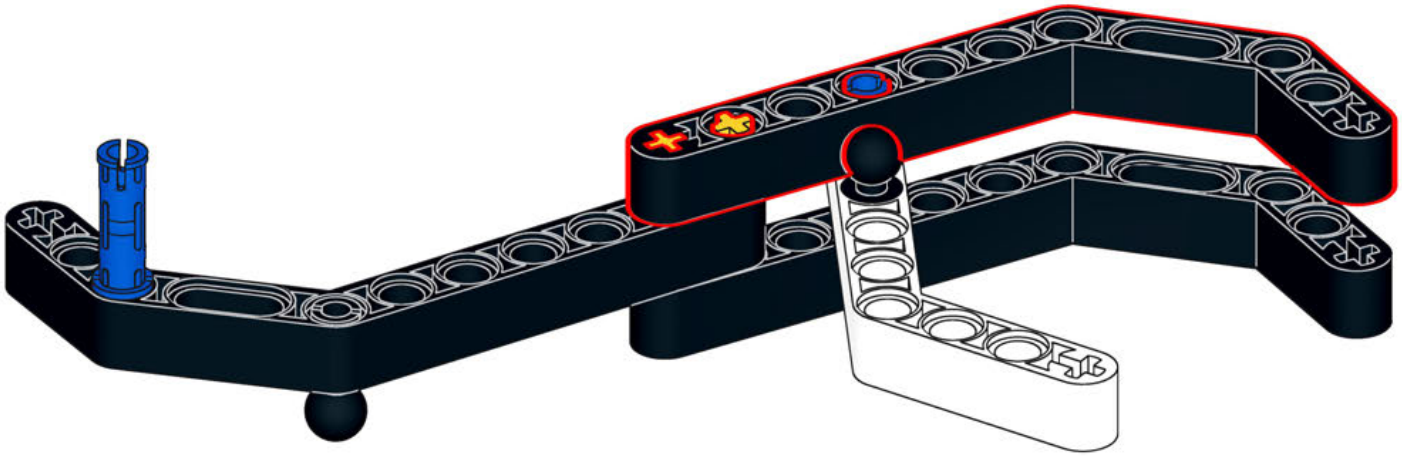

150

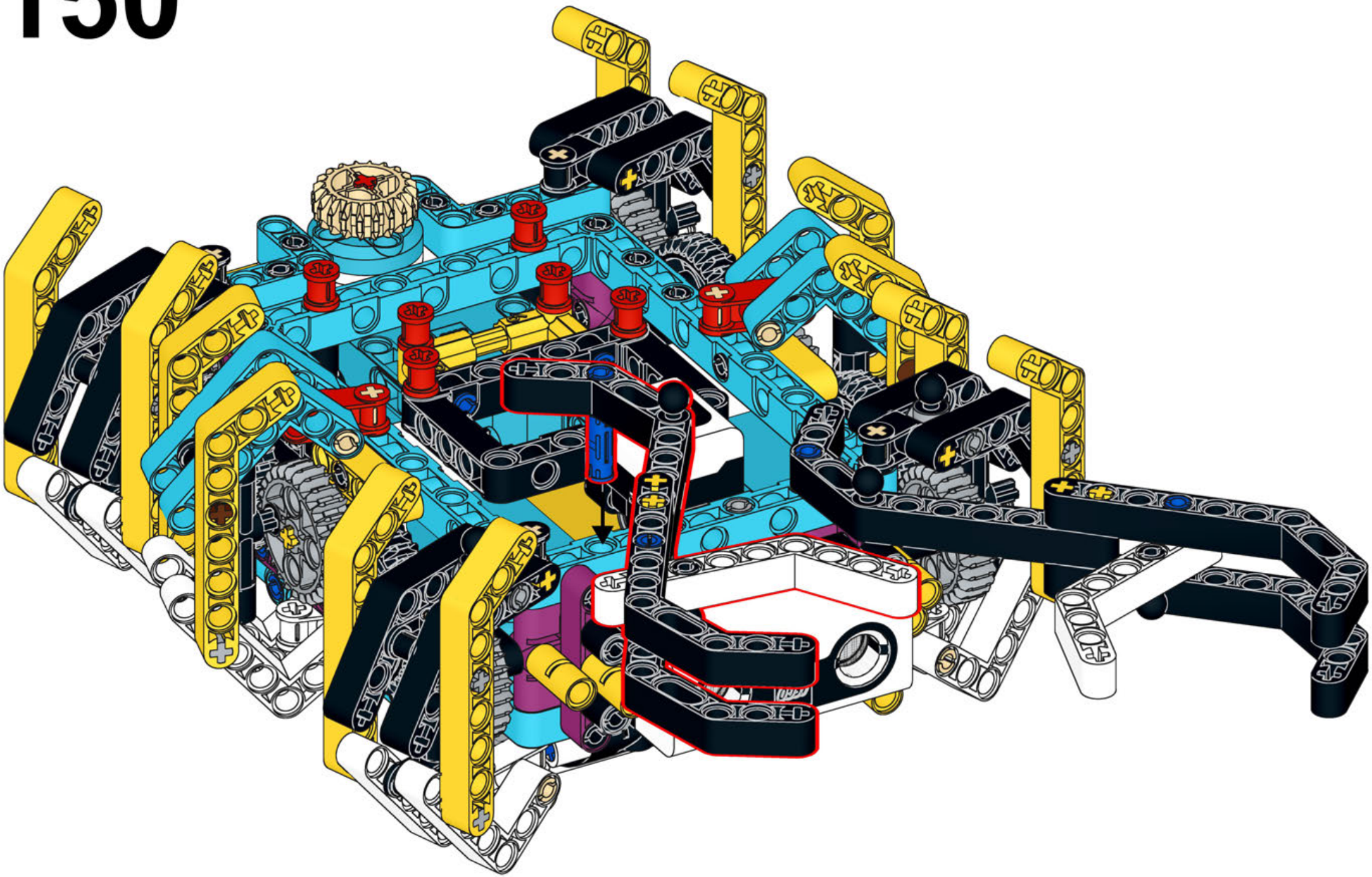

151

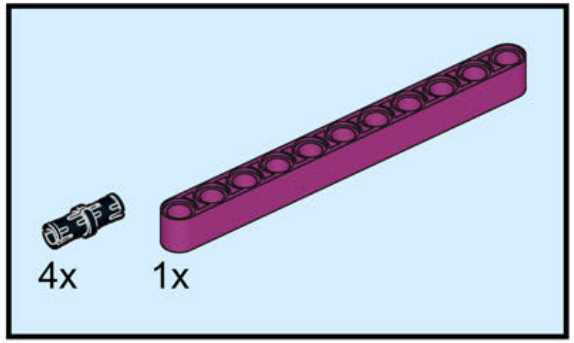

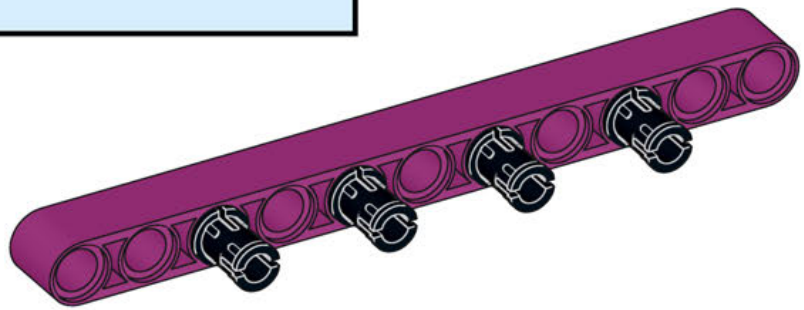

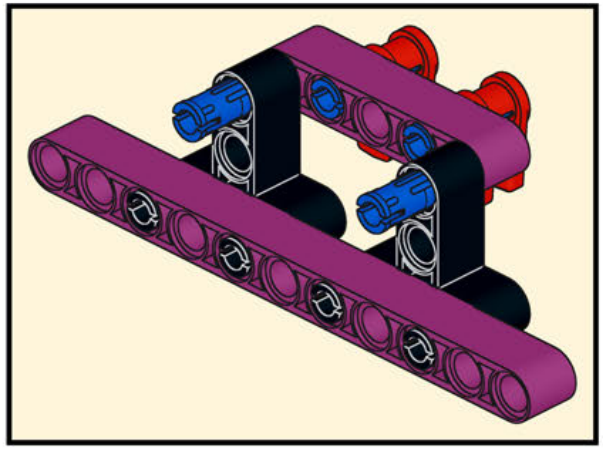

152

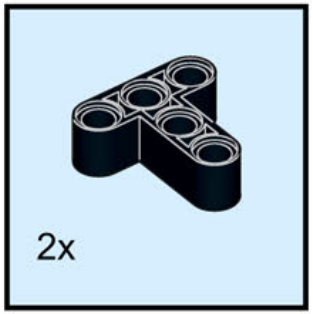

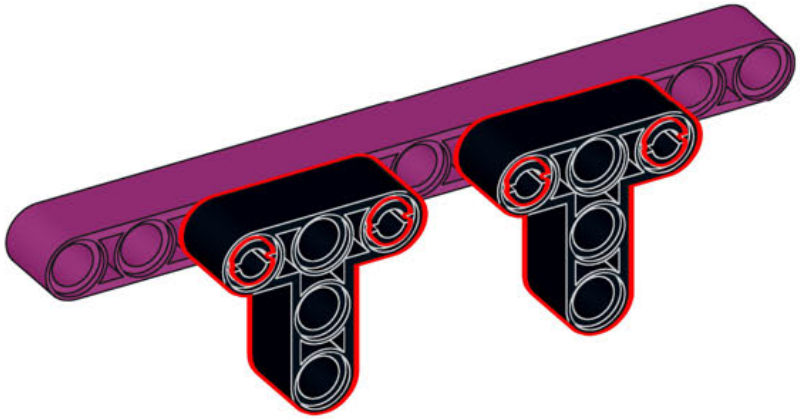

153

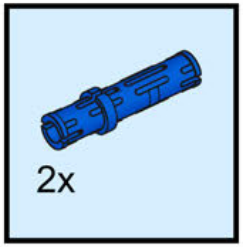

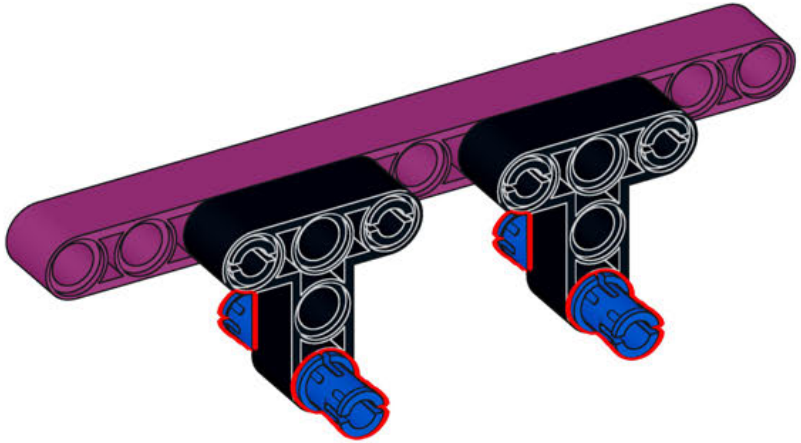

154

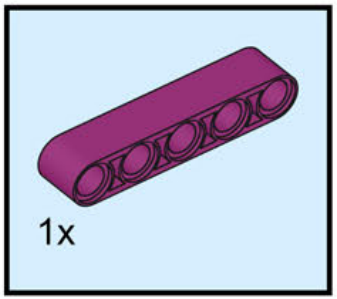

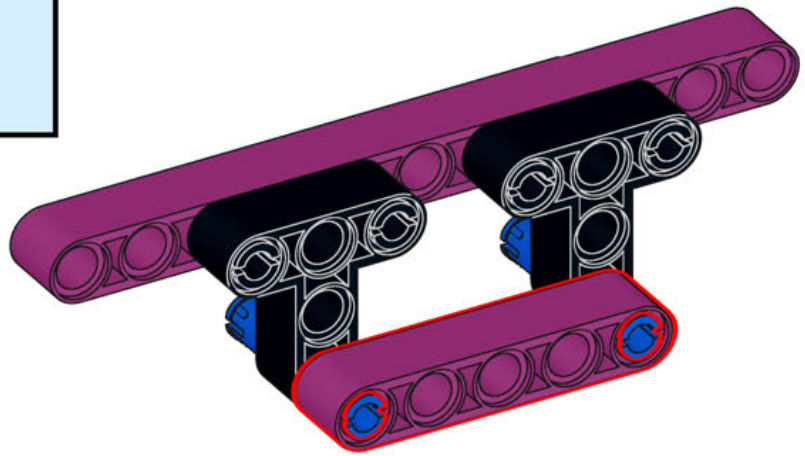

155

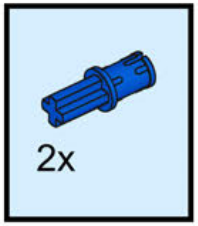

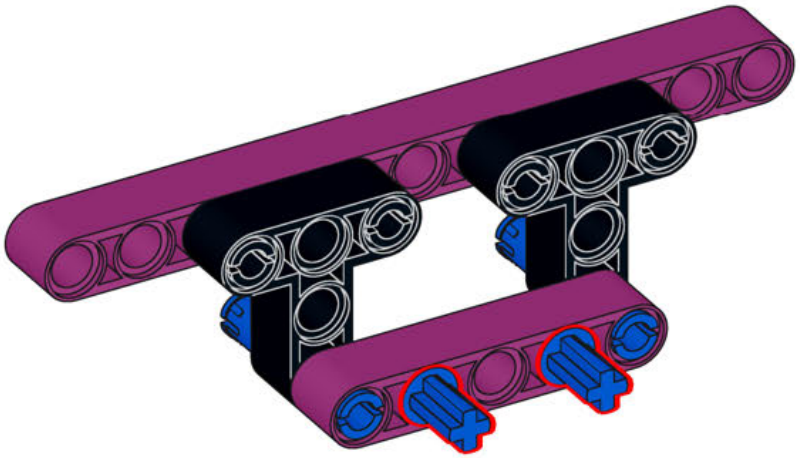

156

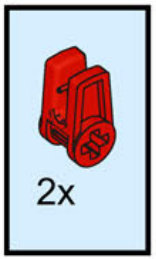

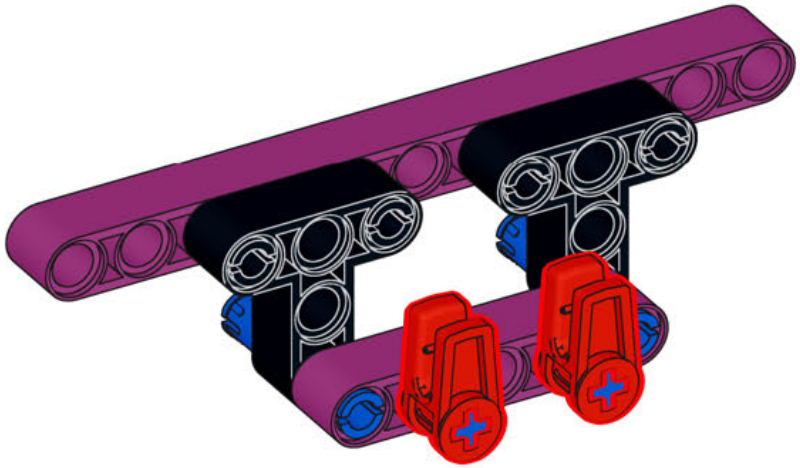

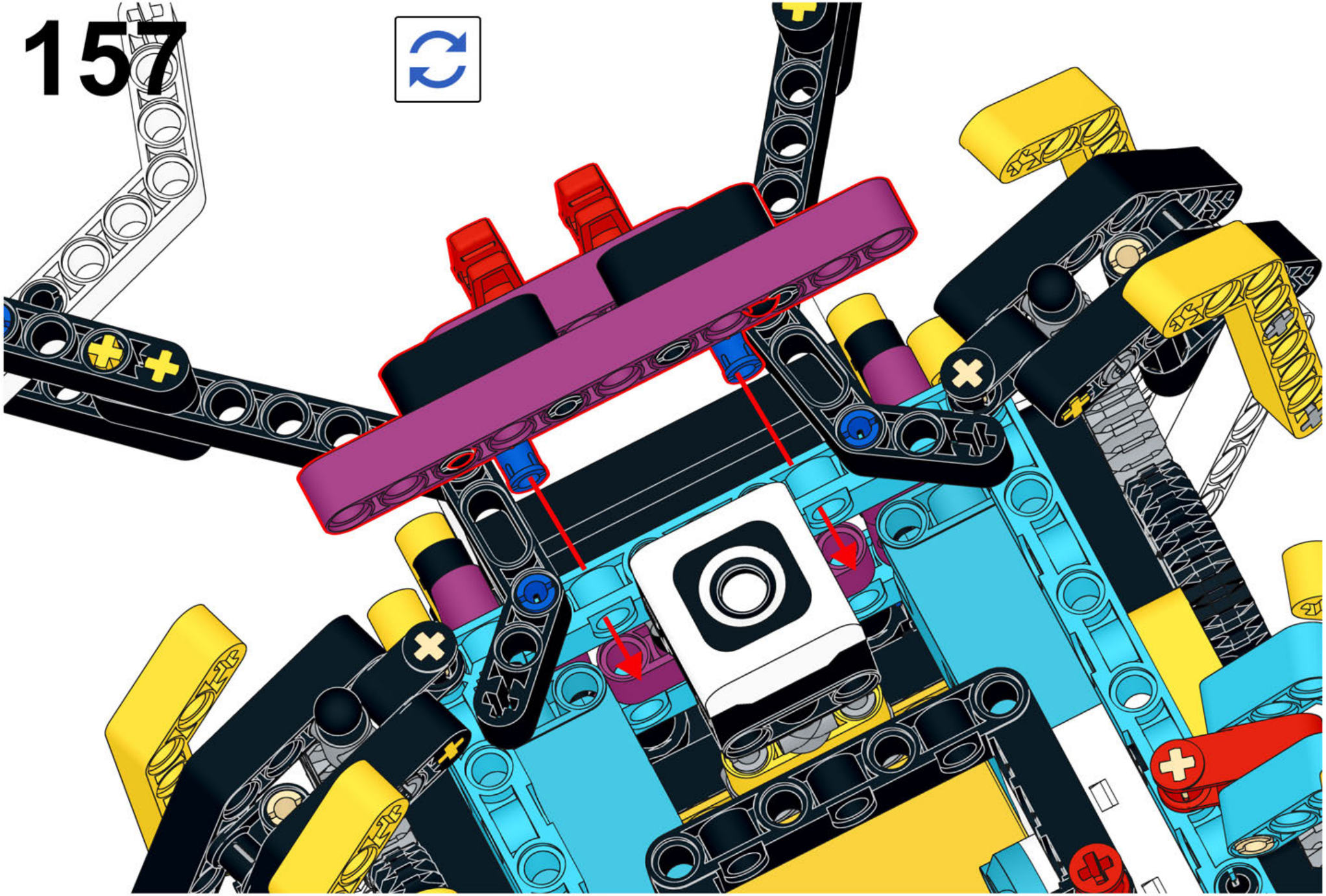
157

158

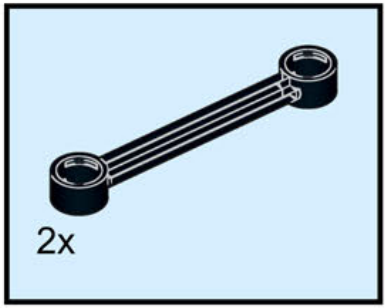

159

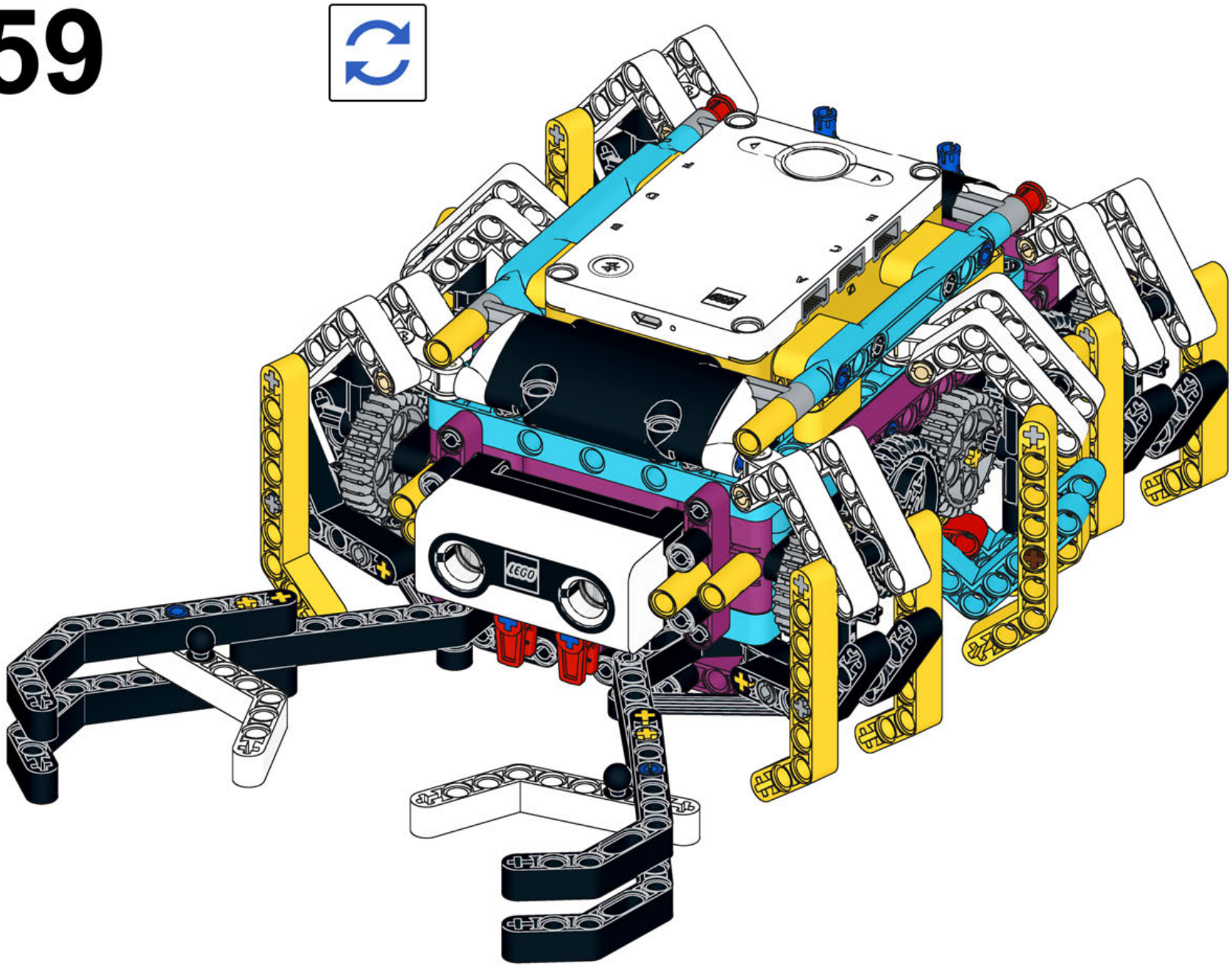

160

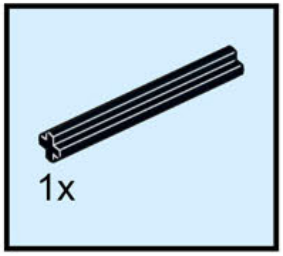

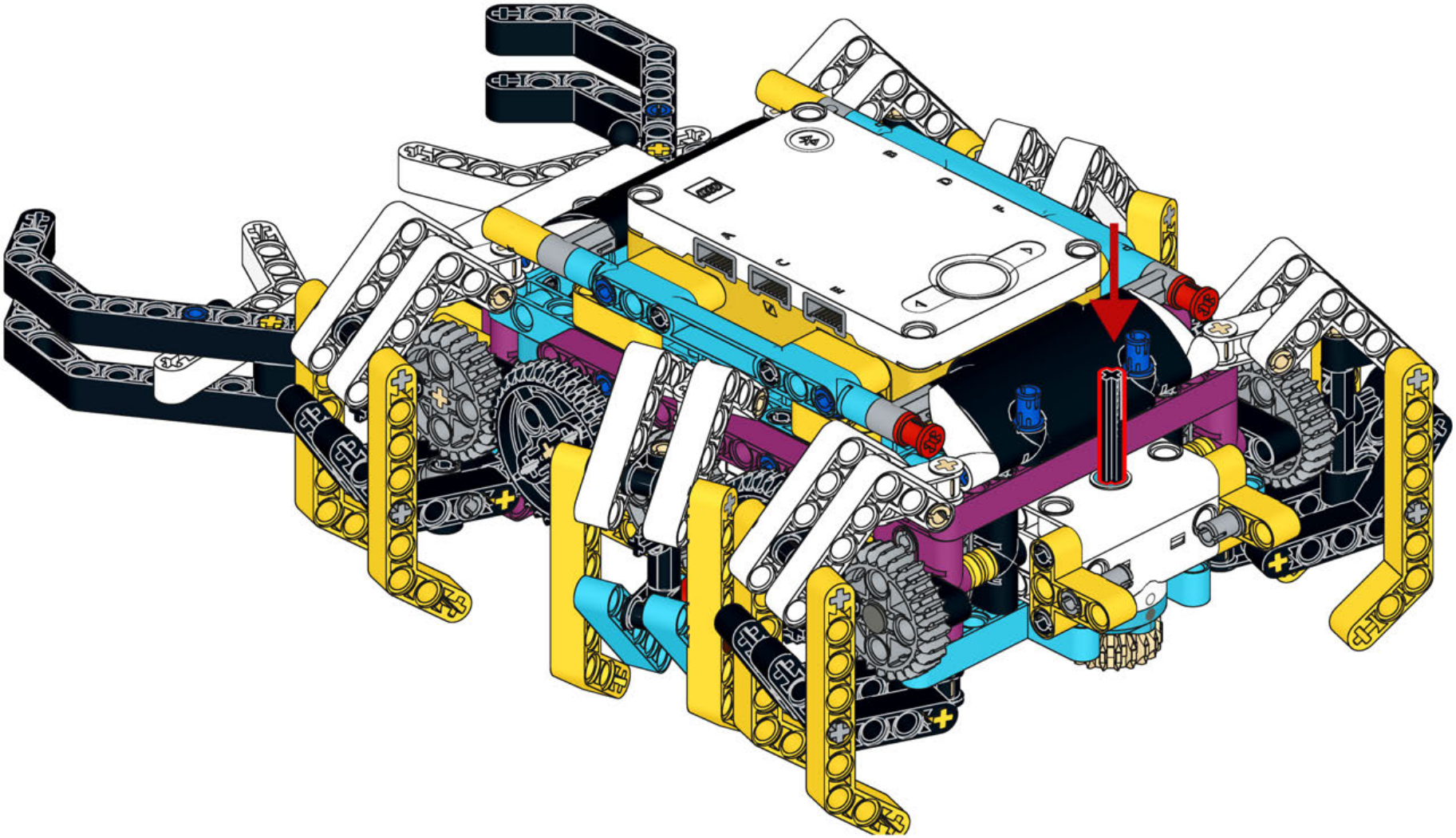

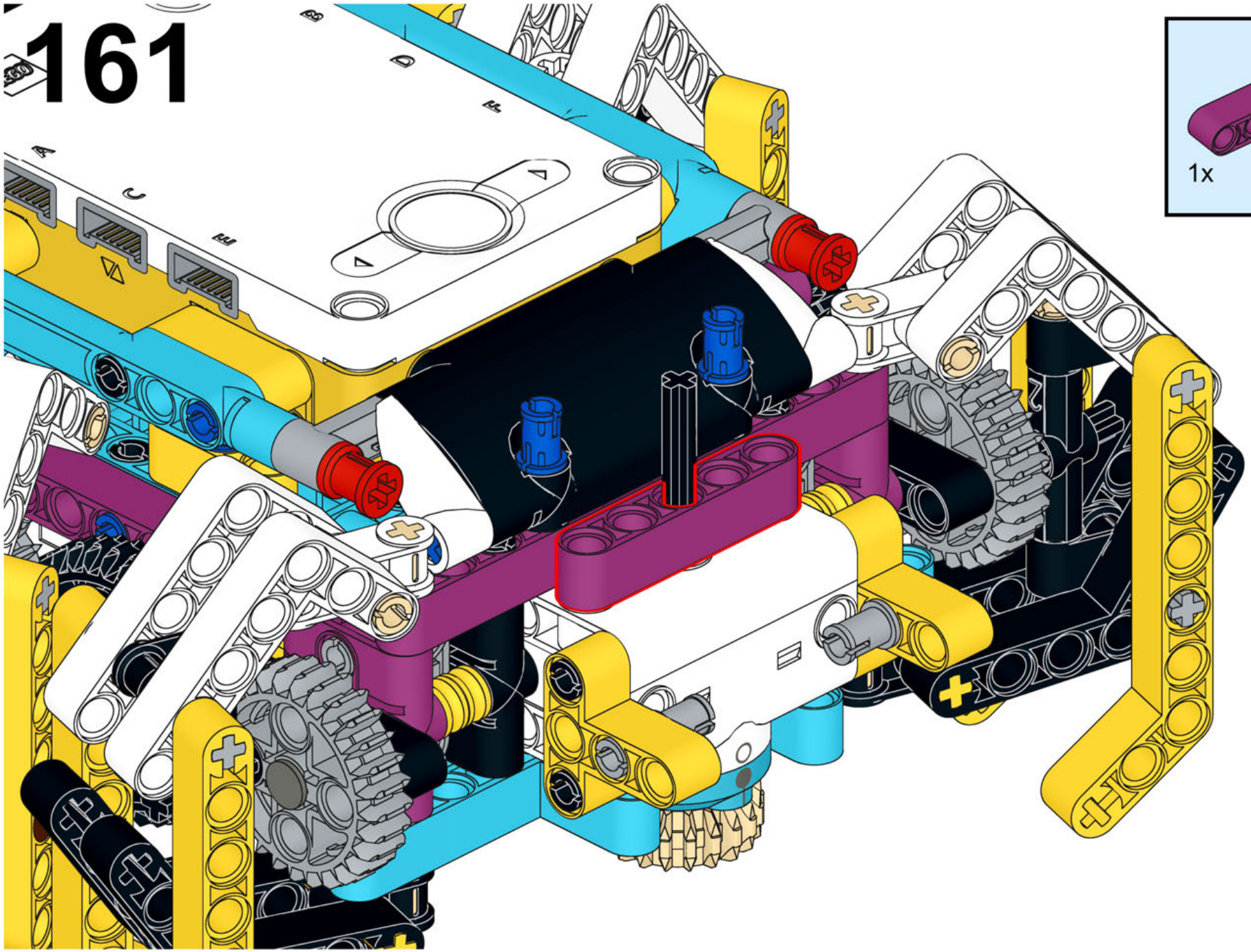
161

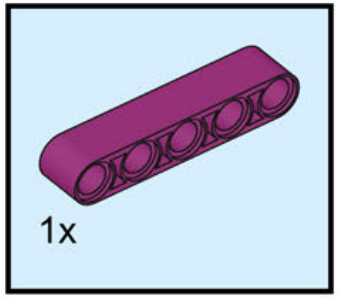
1x

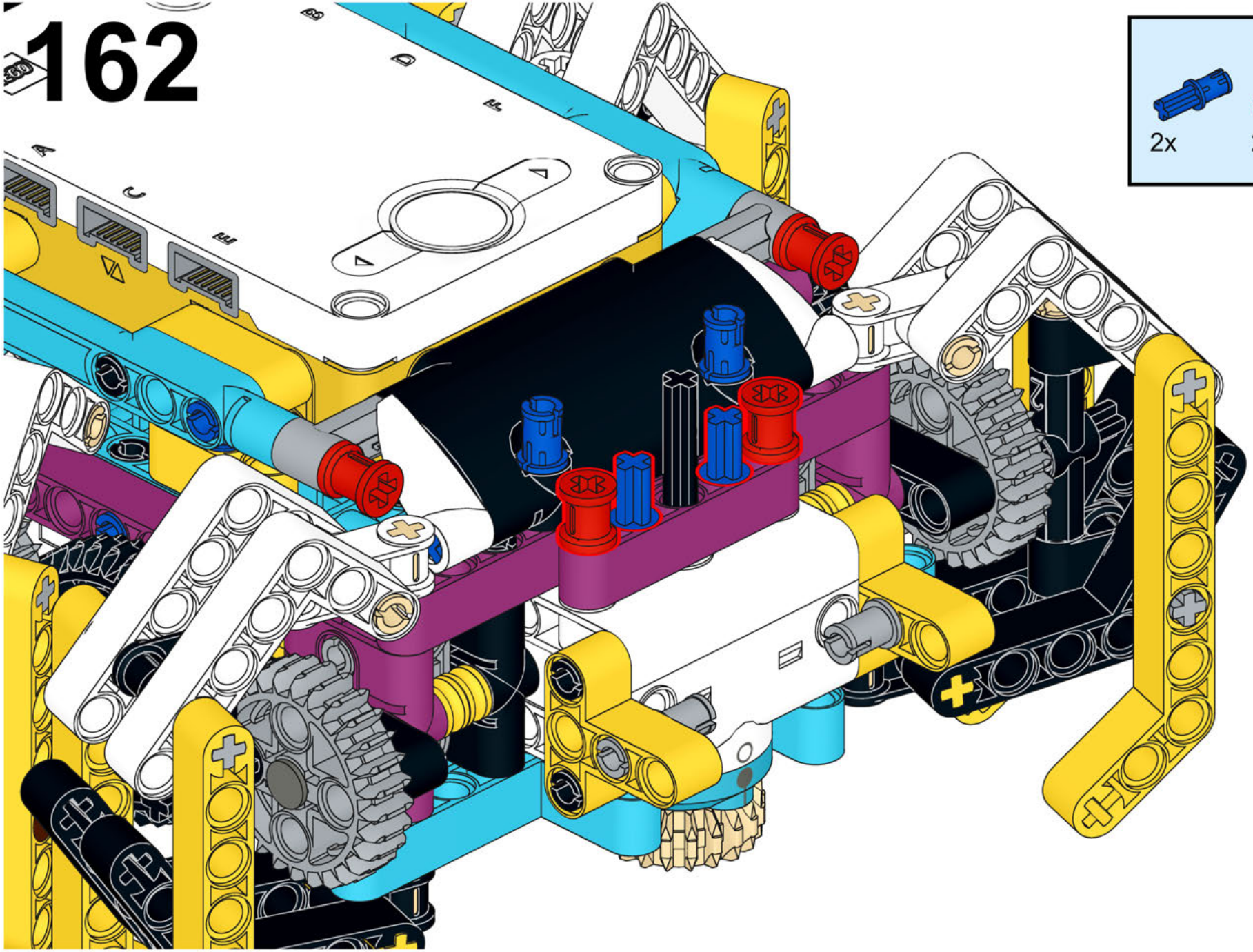
162
2x
2x

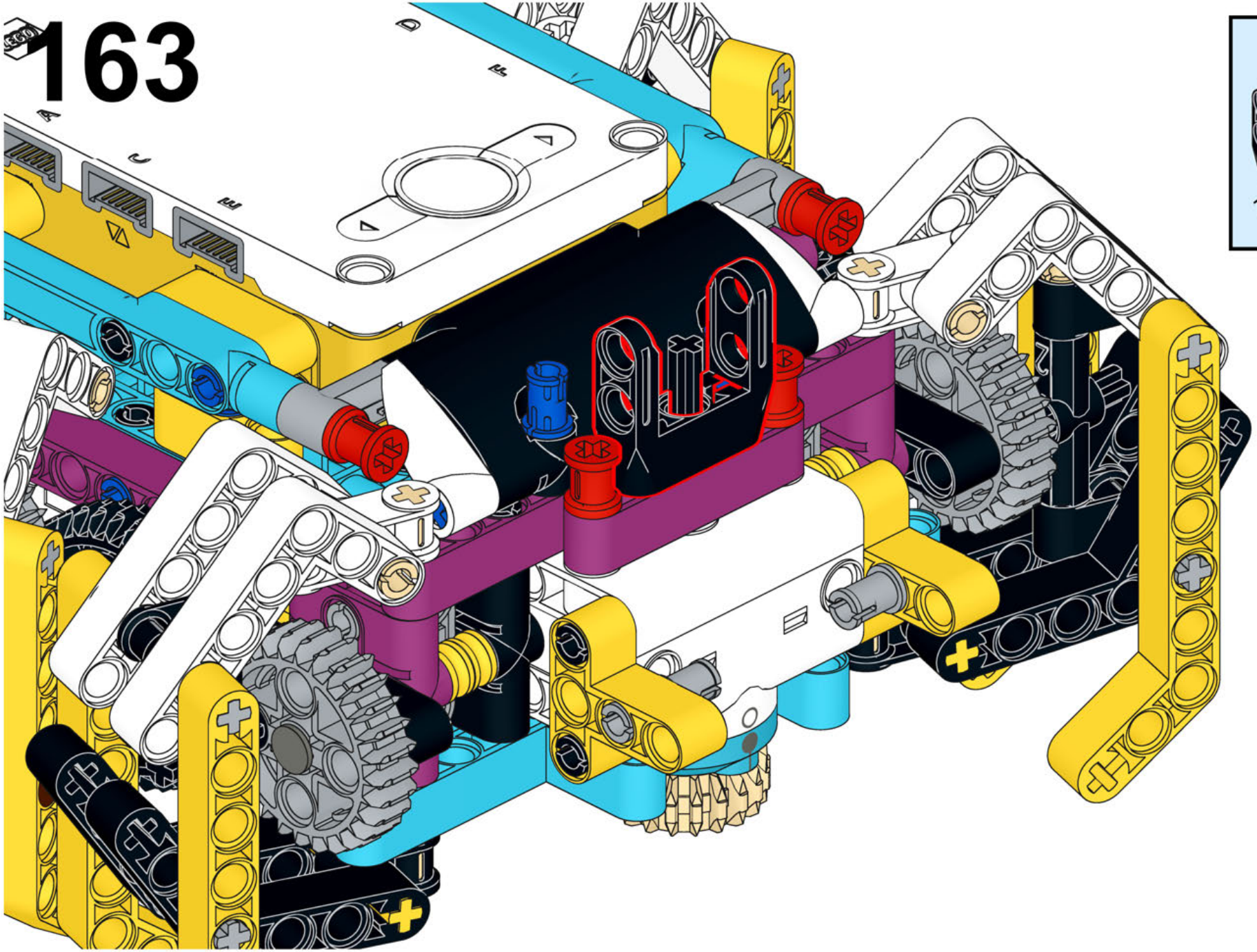
163

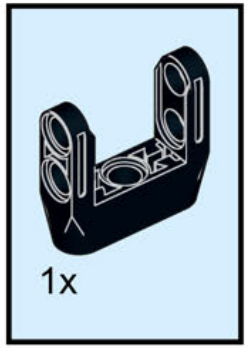
1x

164

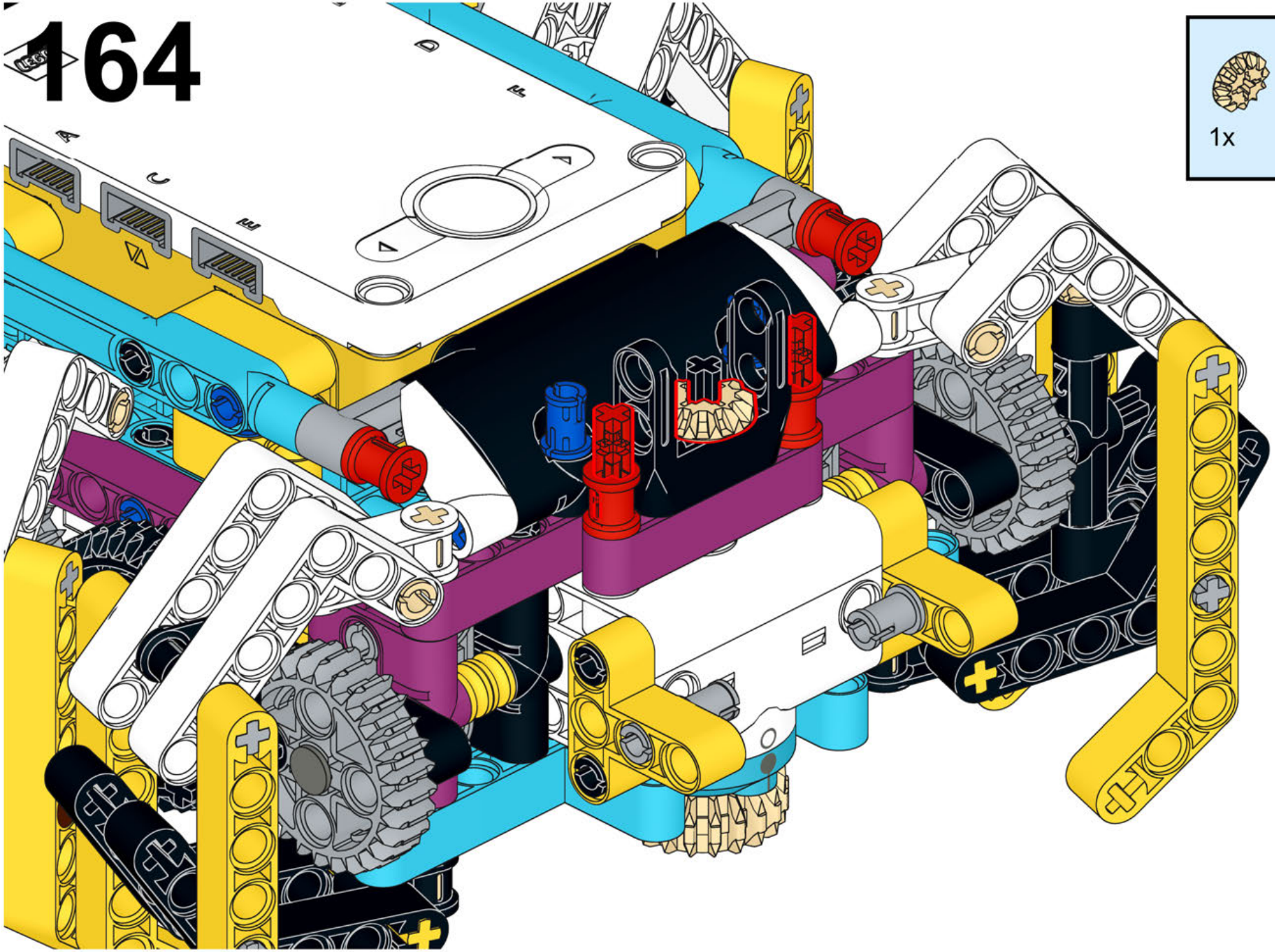

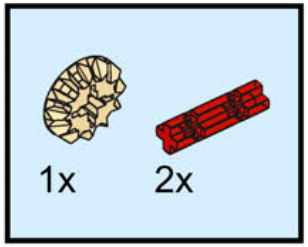

165

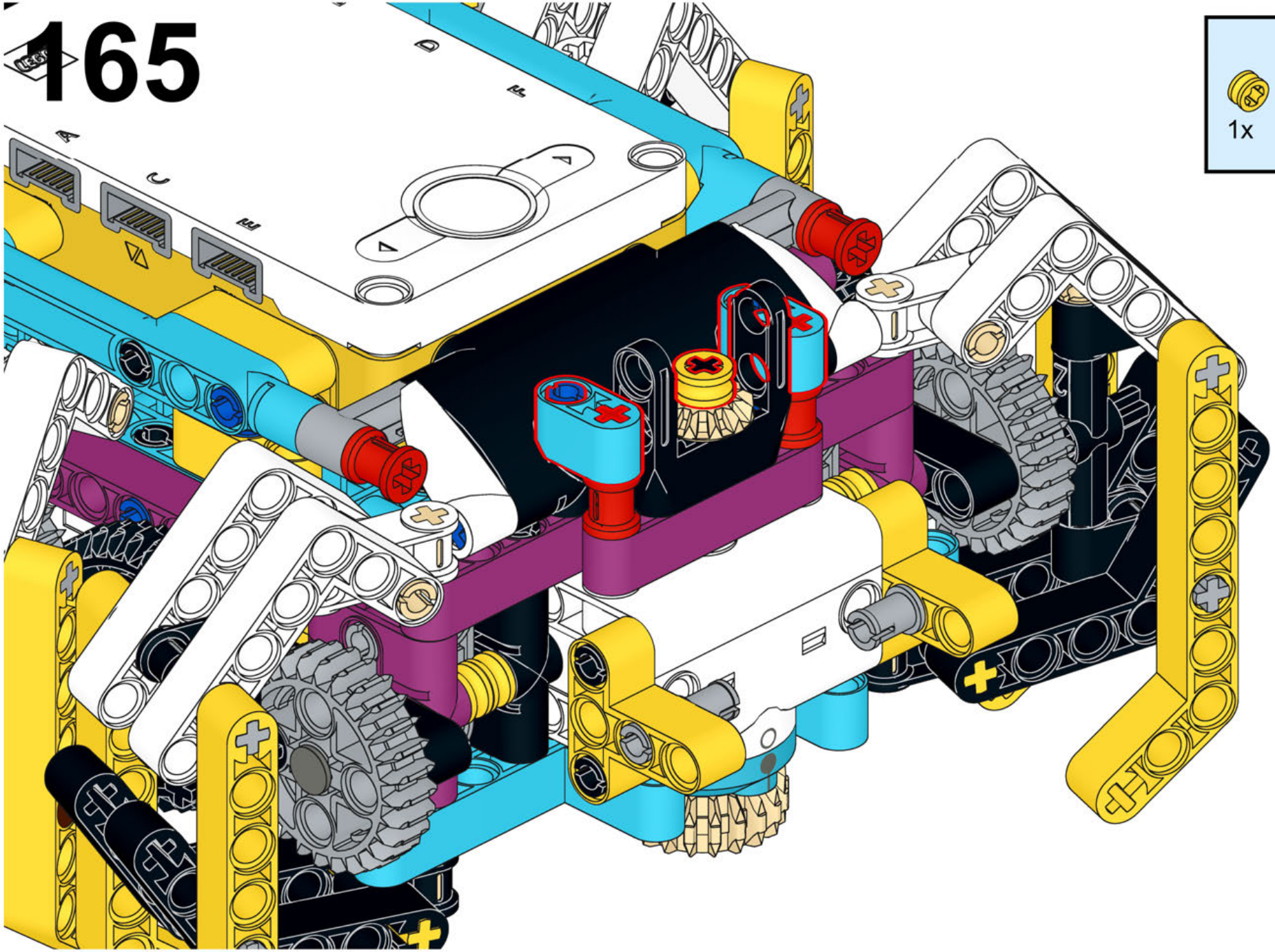

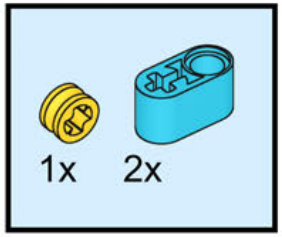

166

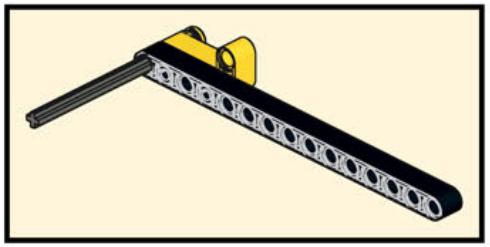

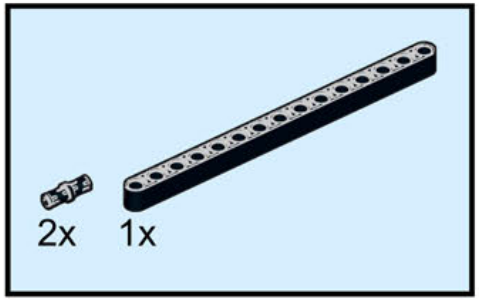

167

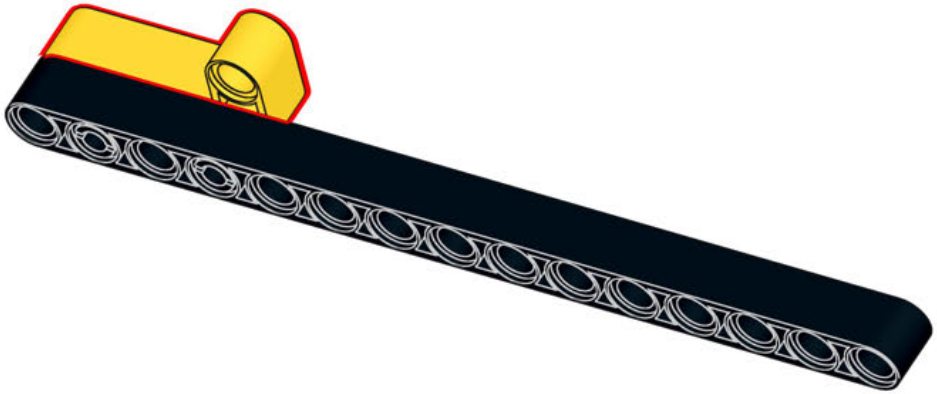

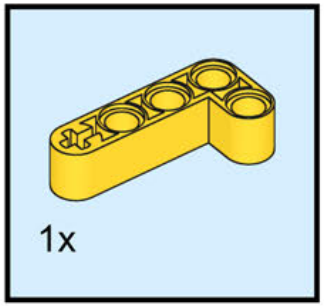

168

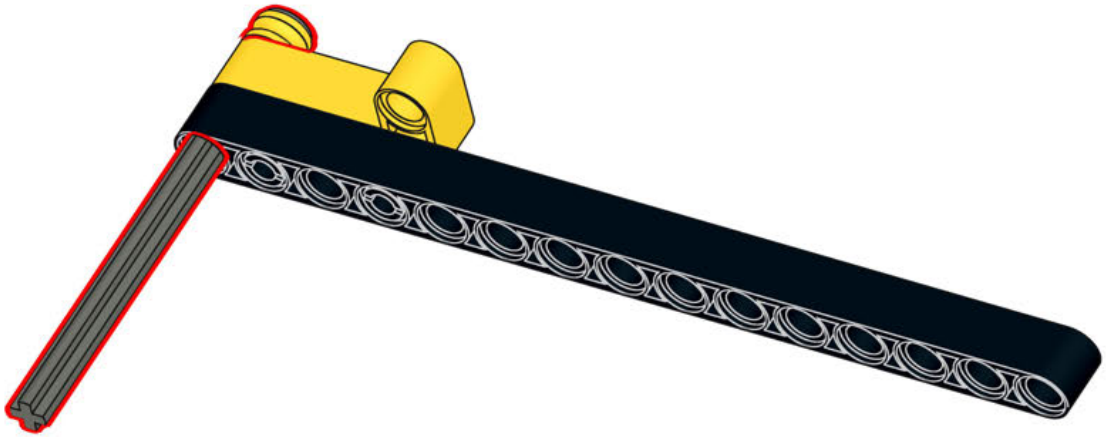

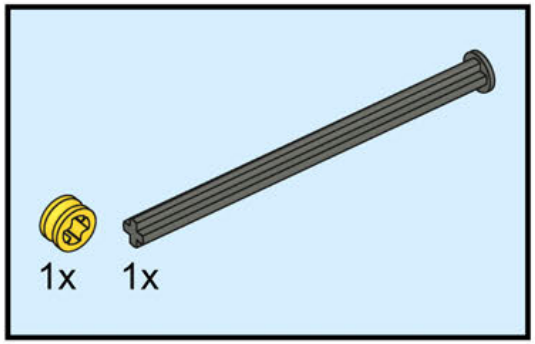

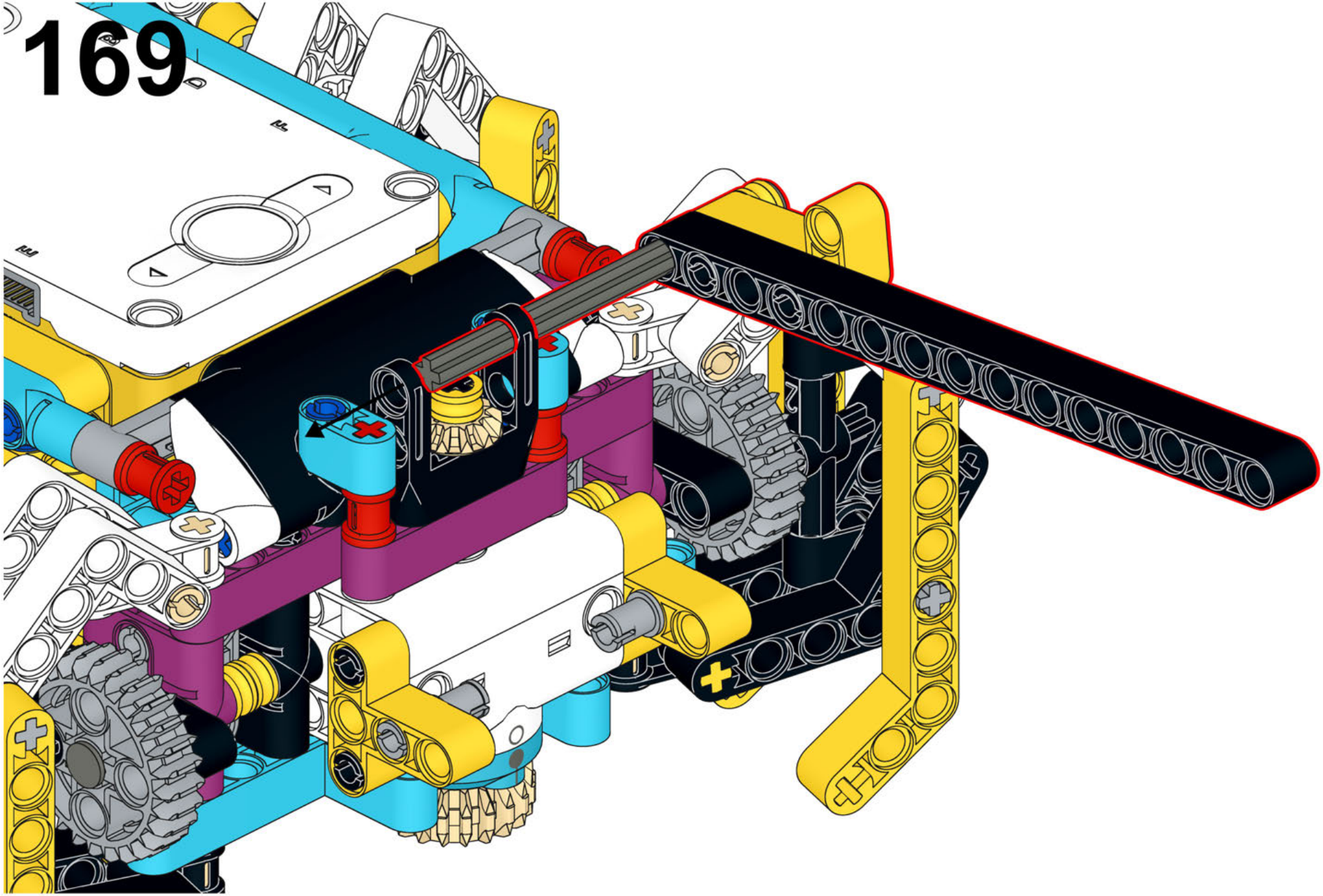
169

170

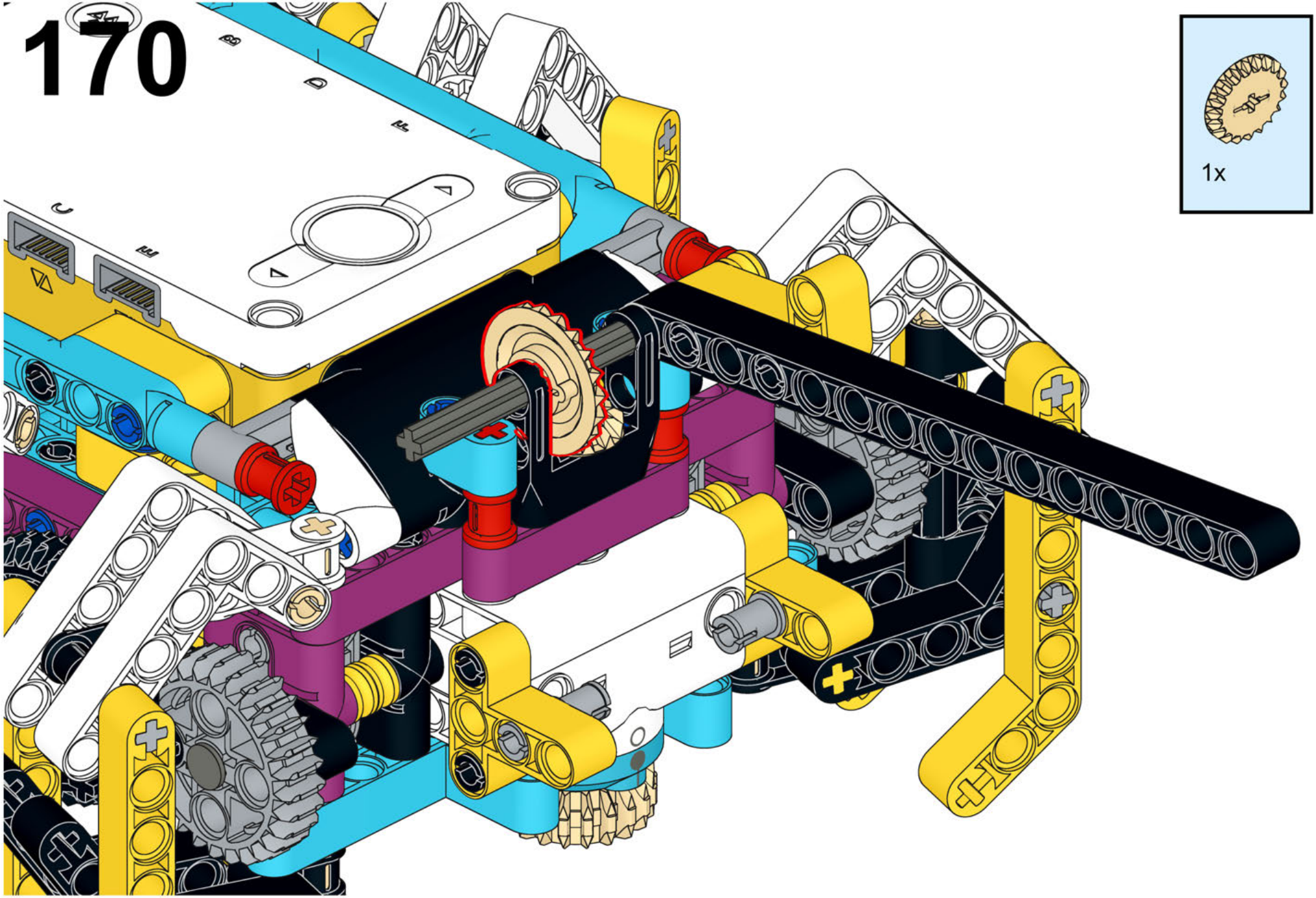

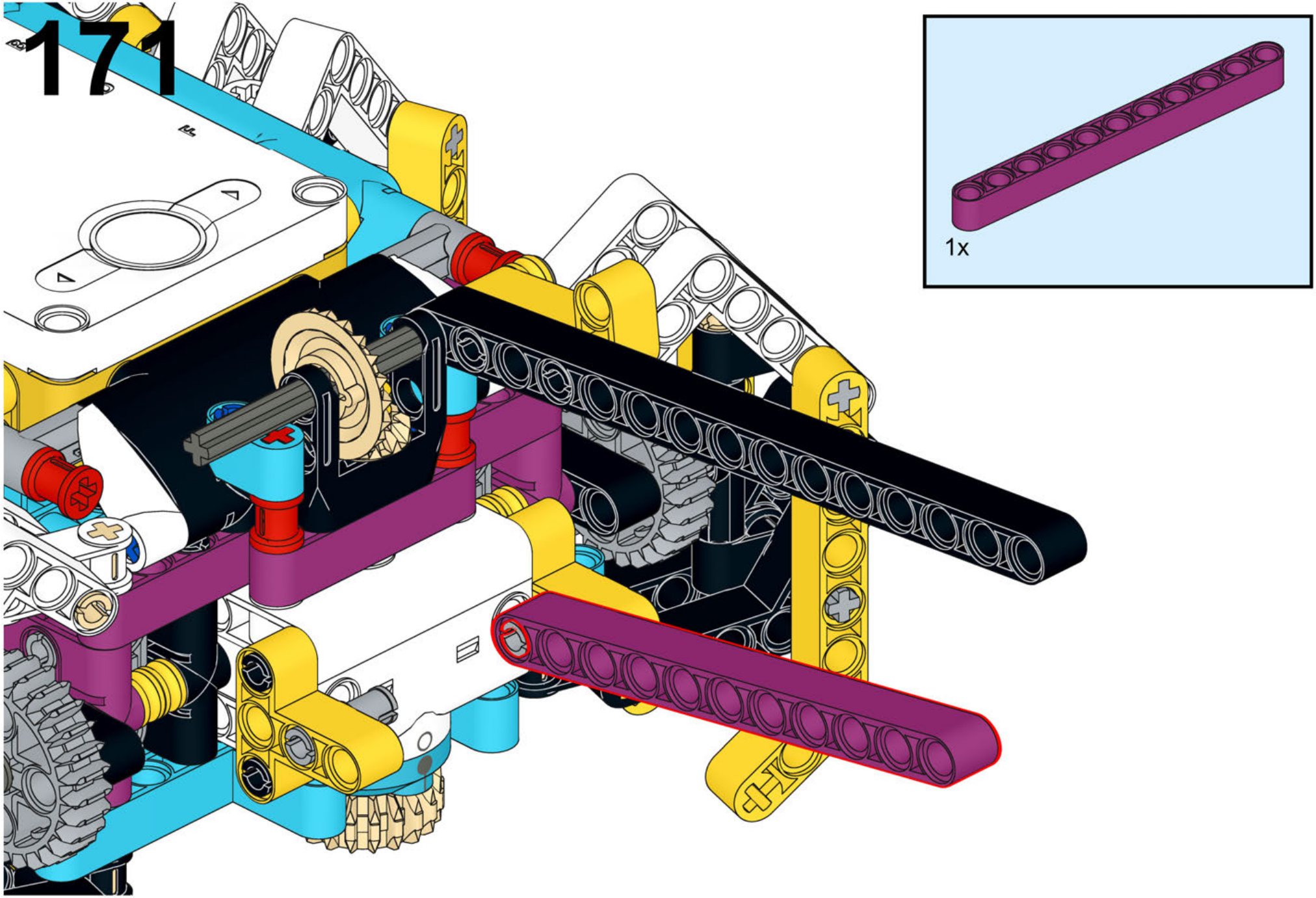
171
1x

172

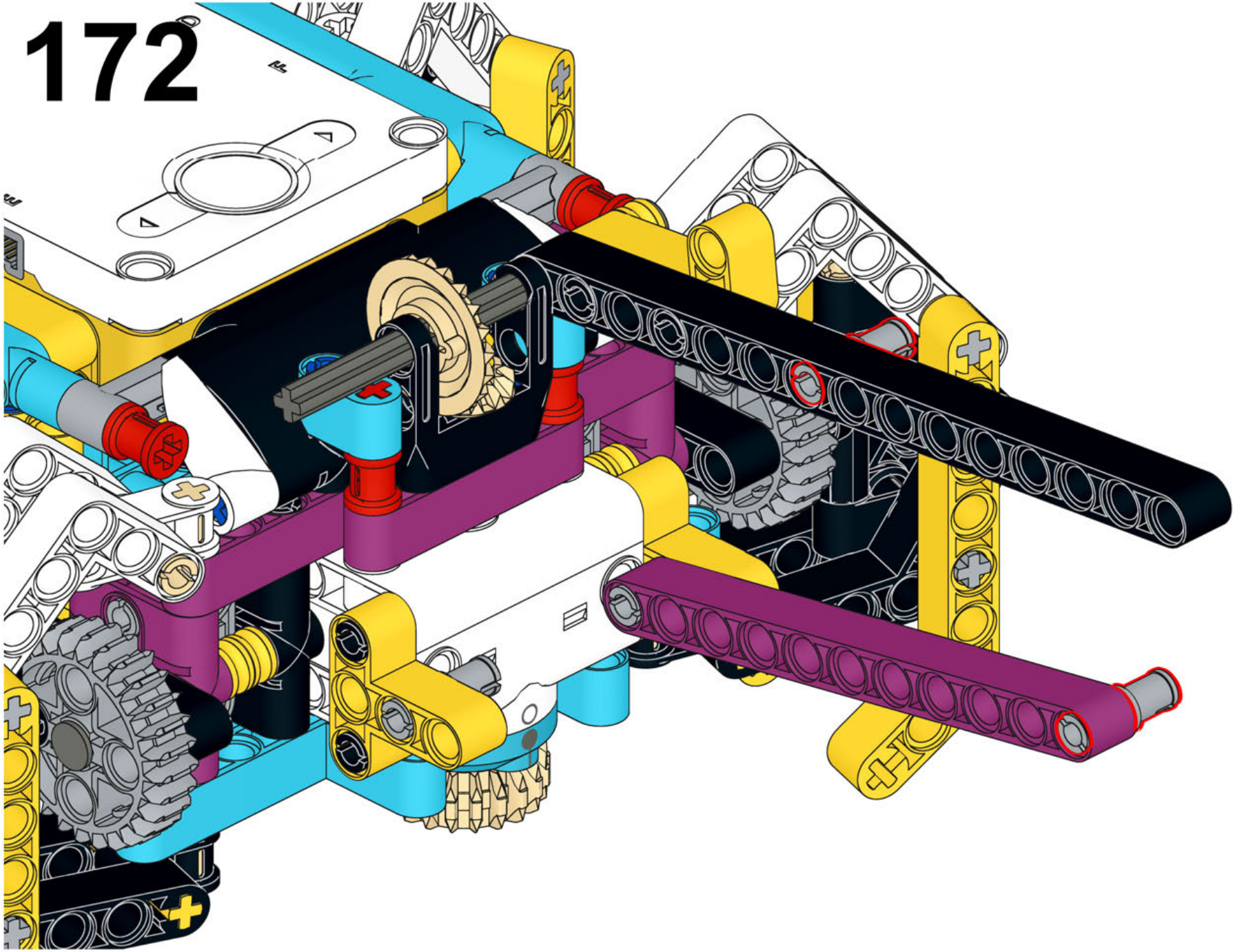

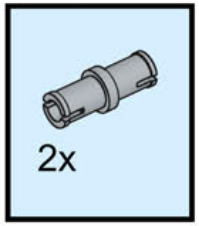

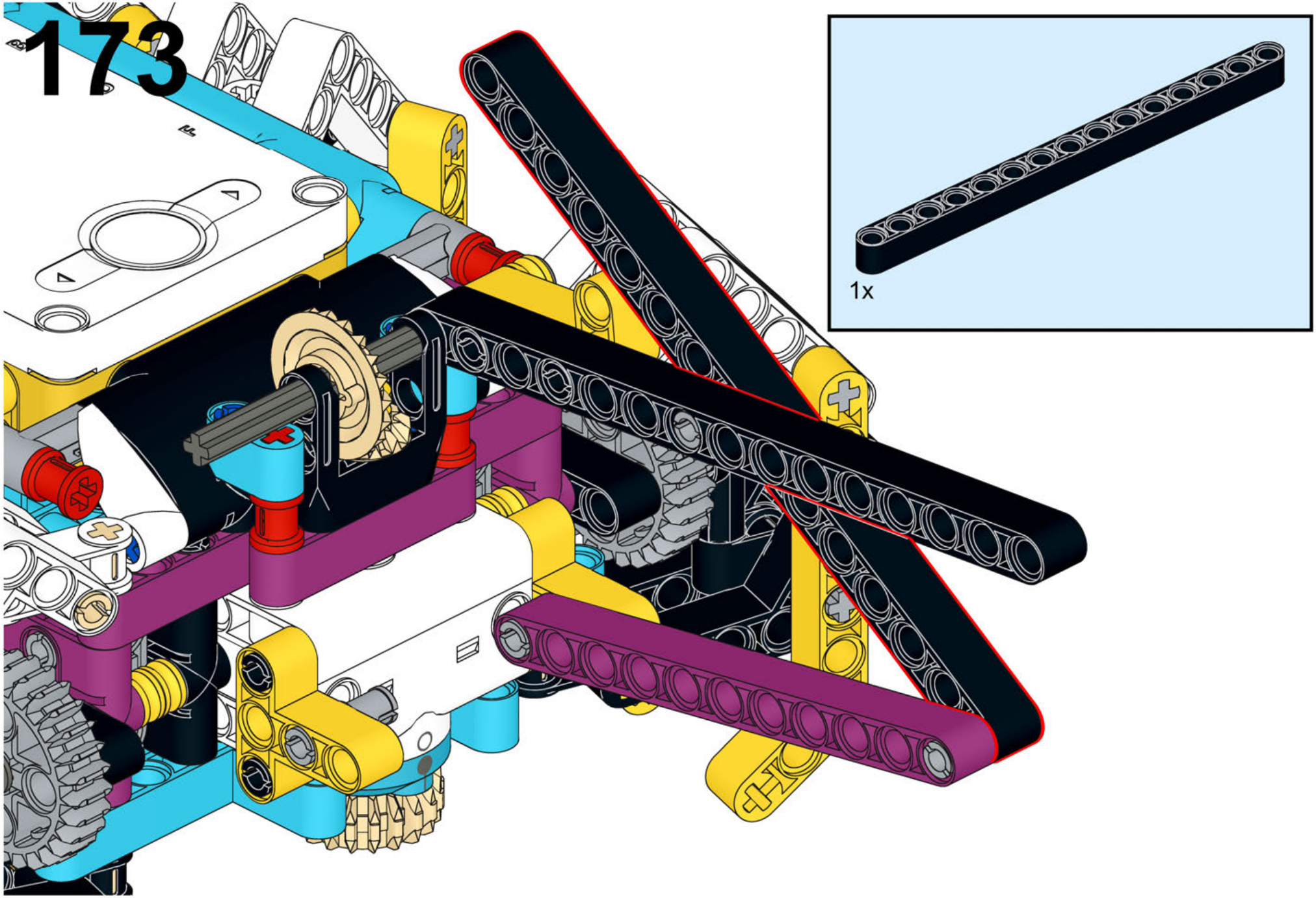
173
1x

174

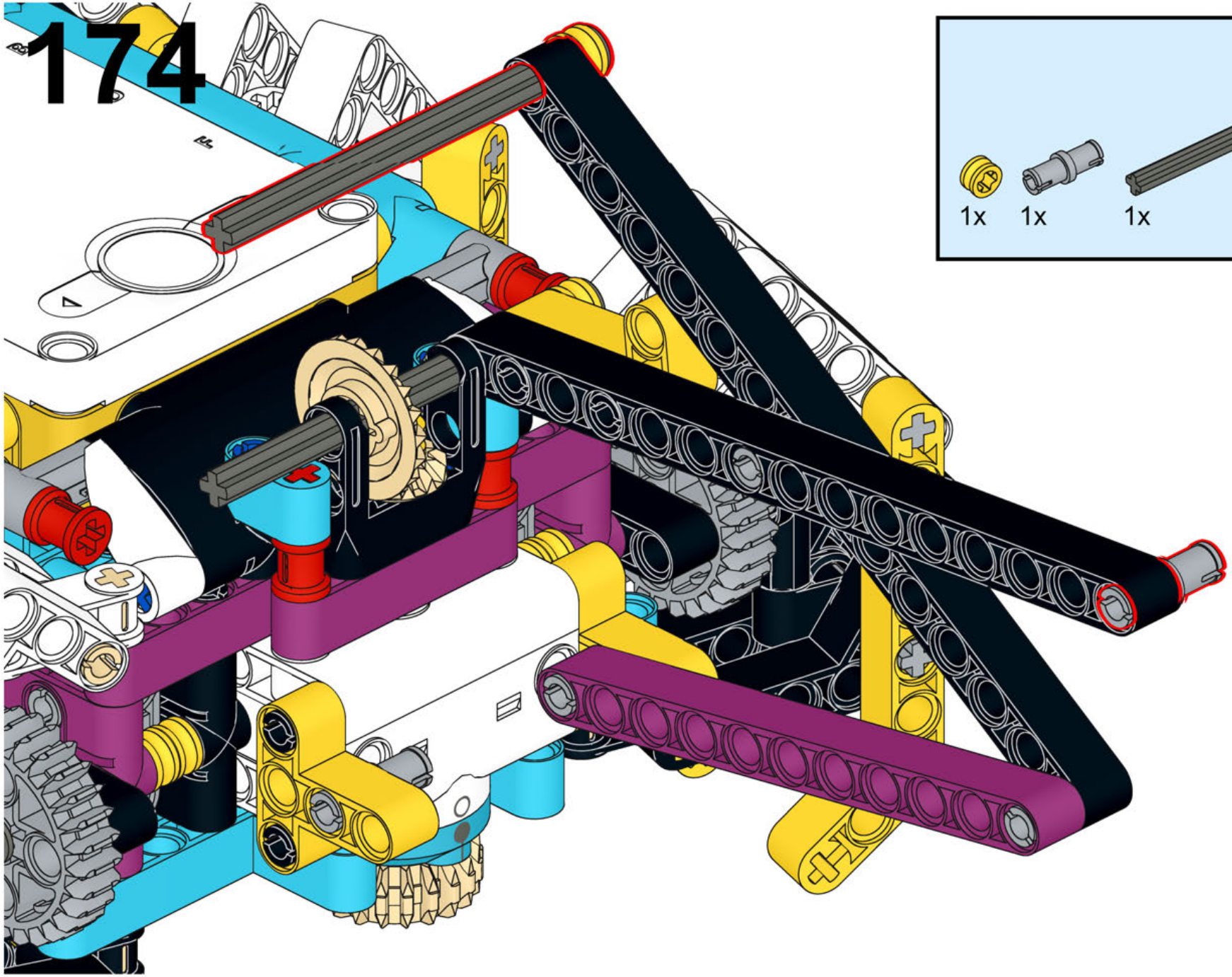

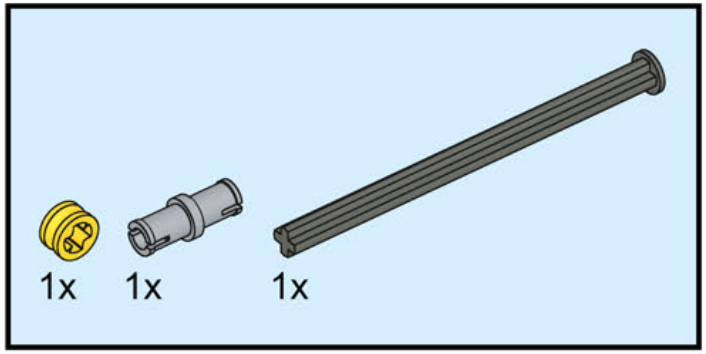

175

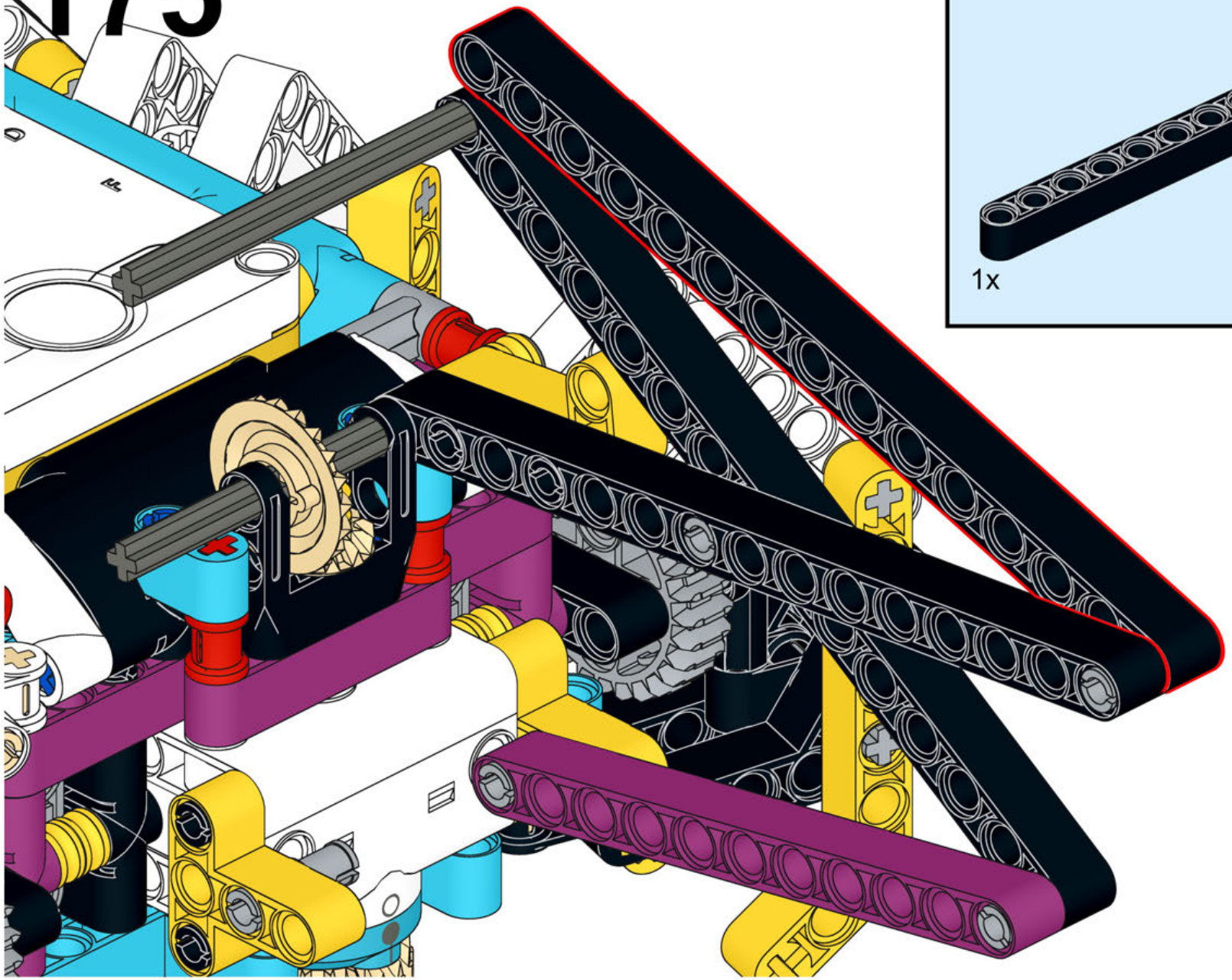

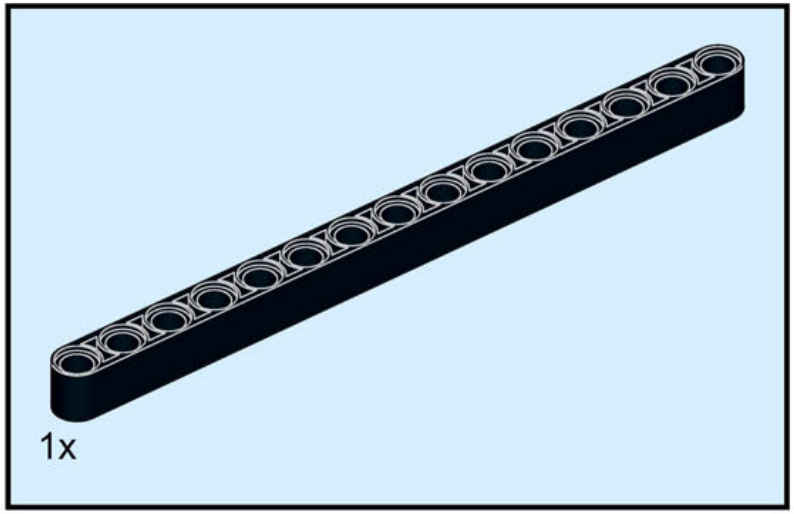

176

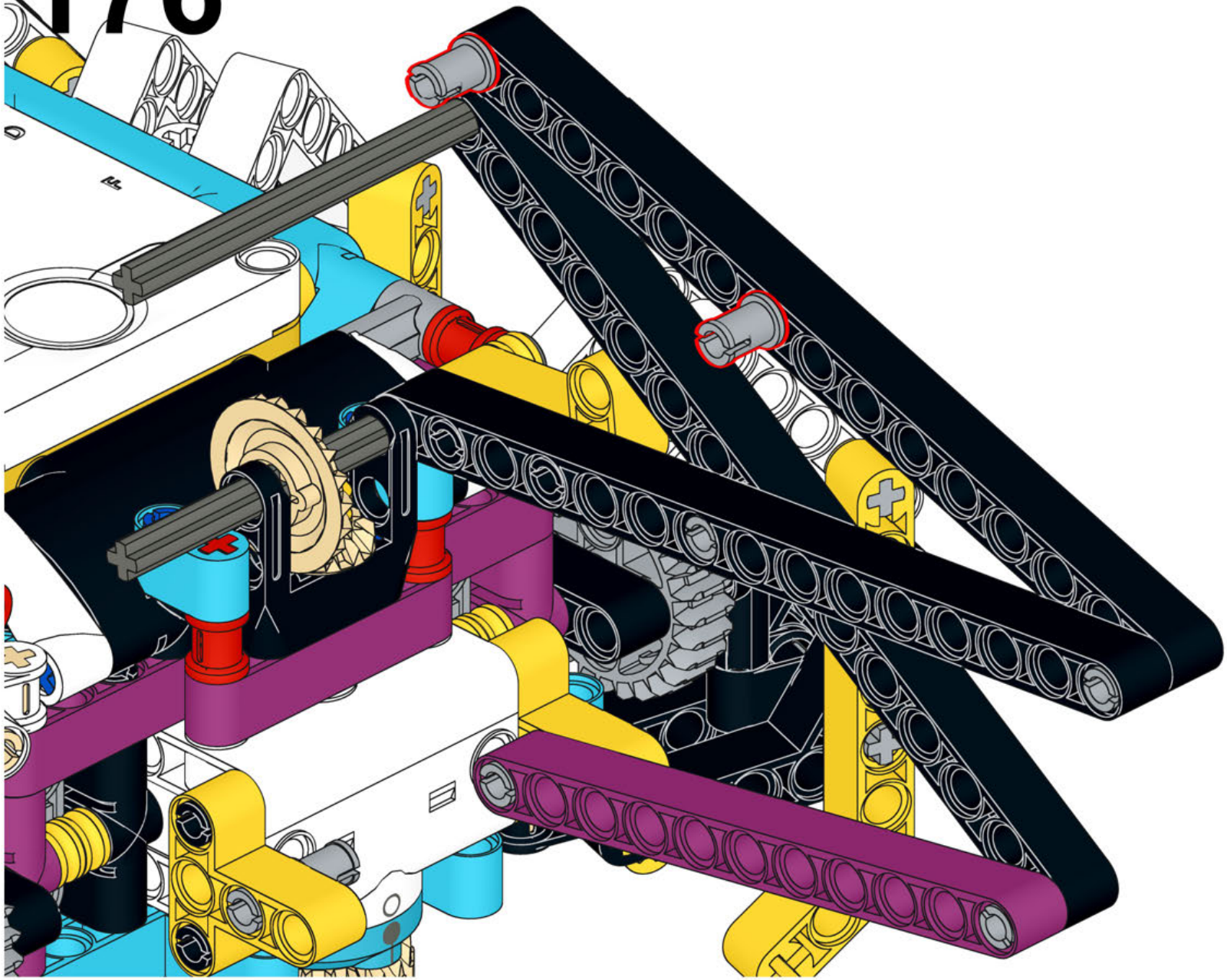

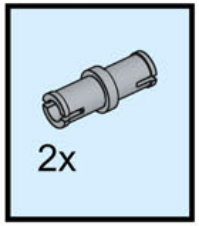

177

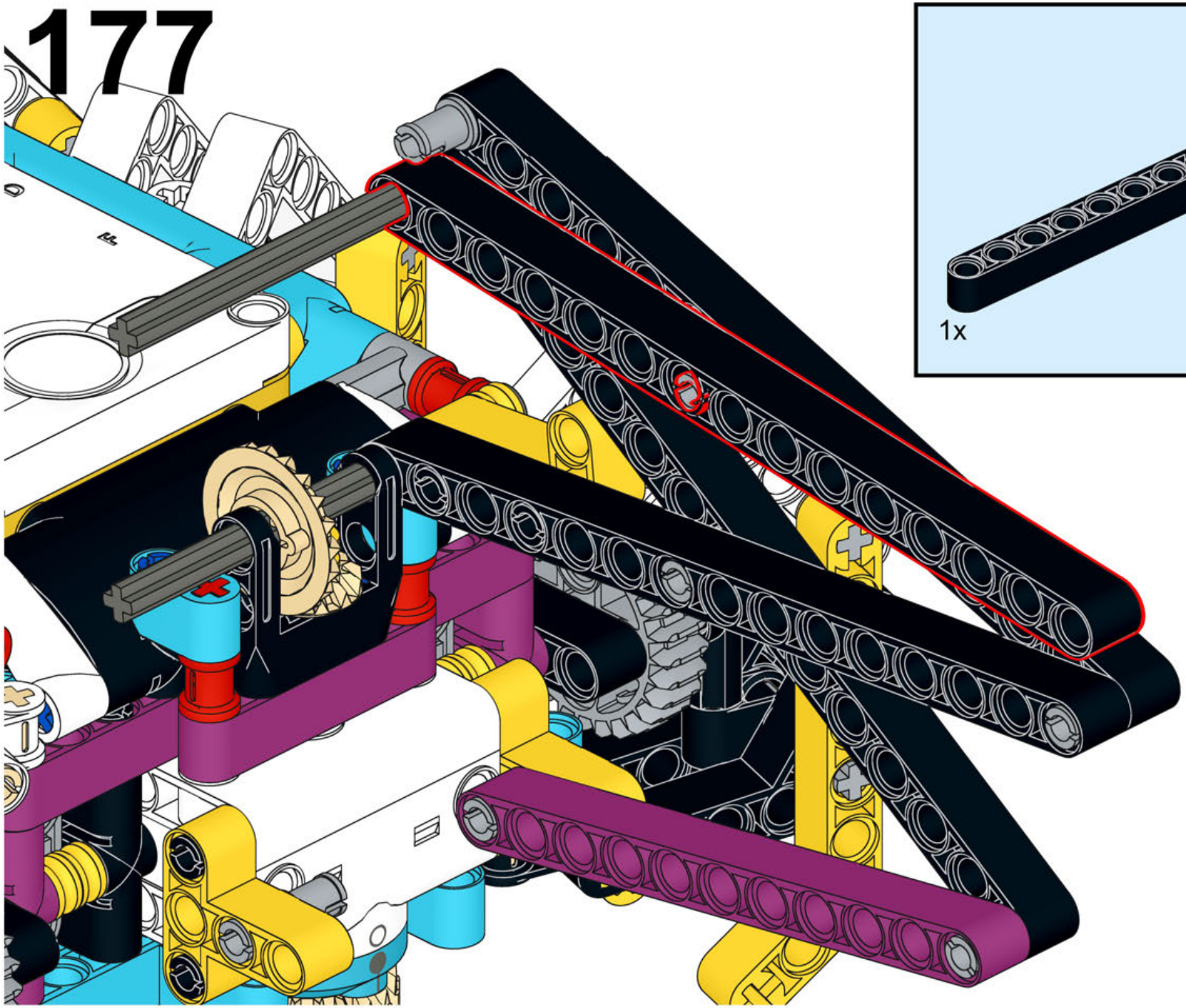

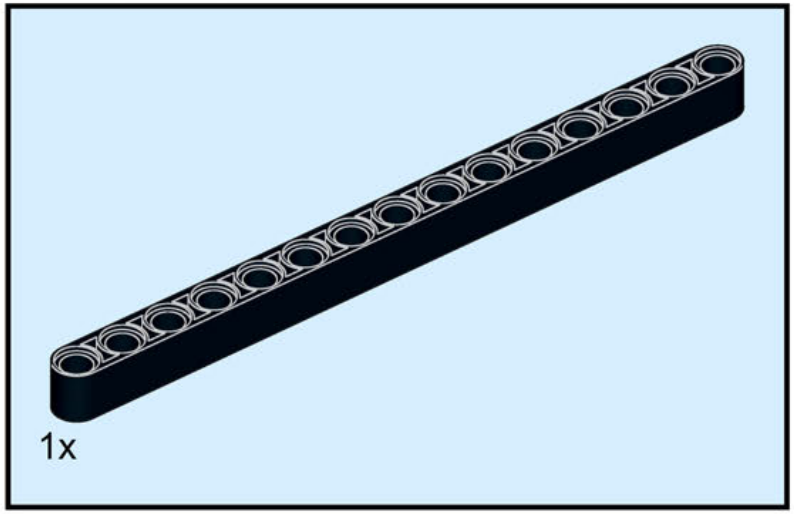

178

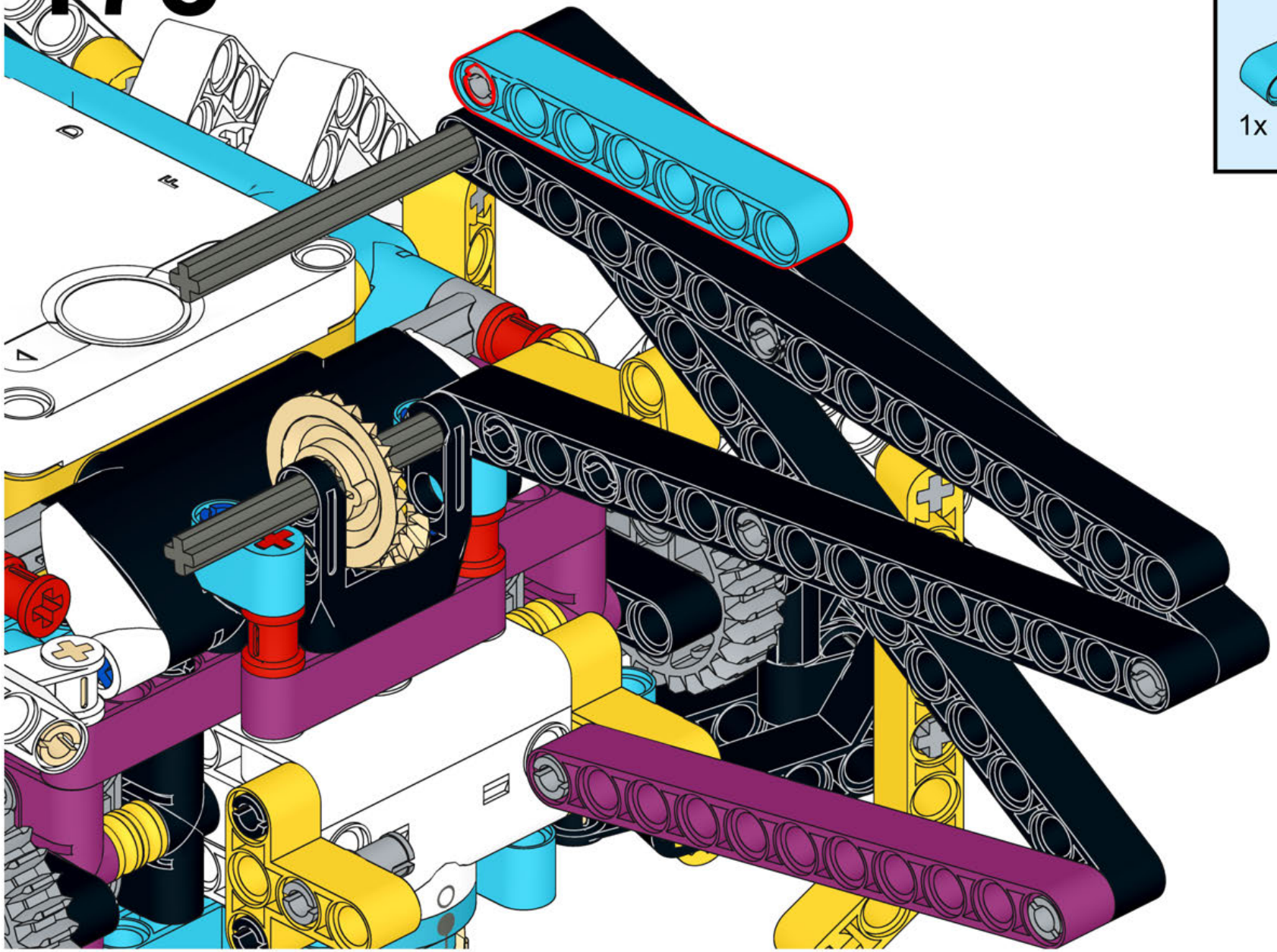

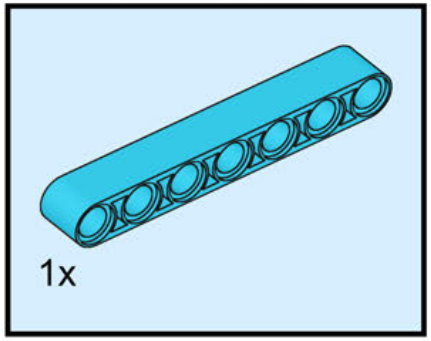

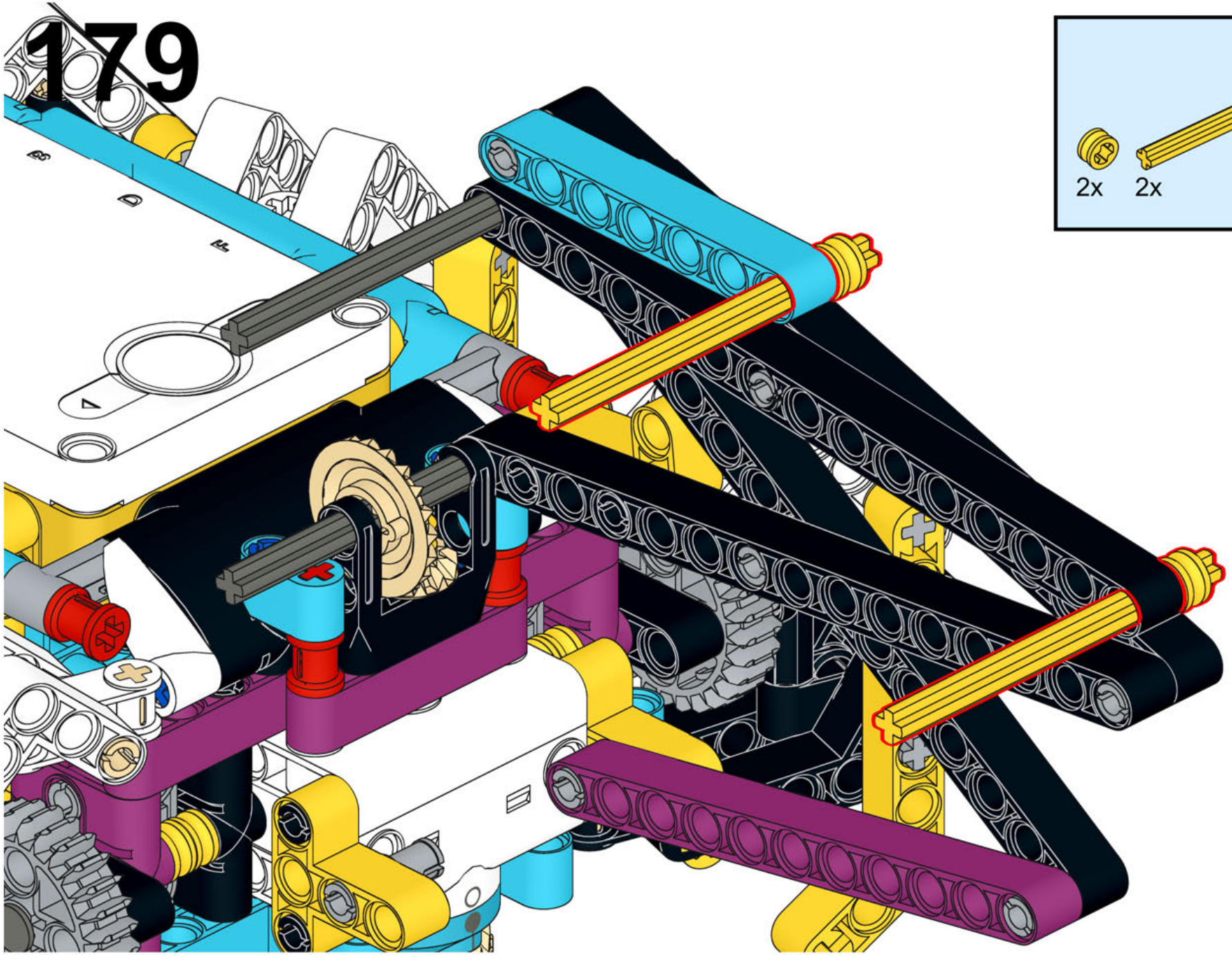
179

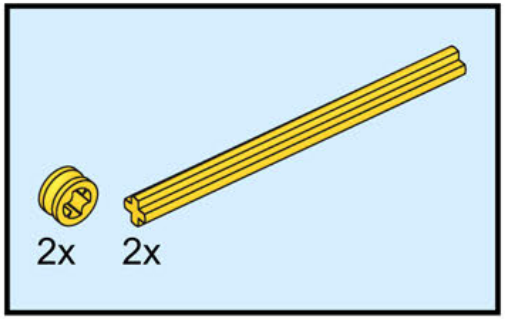
2x
2x

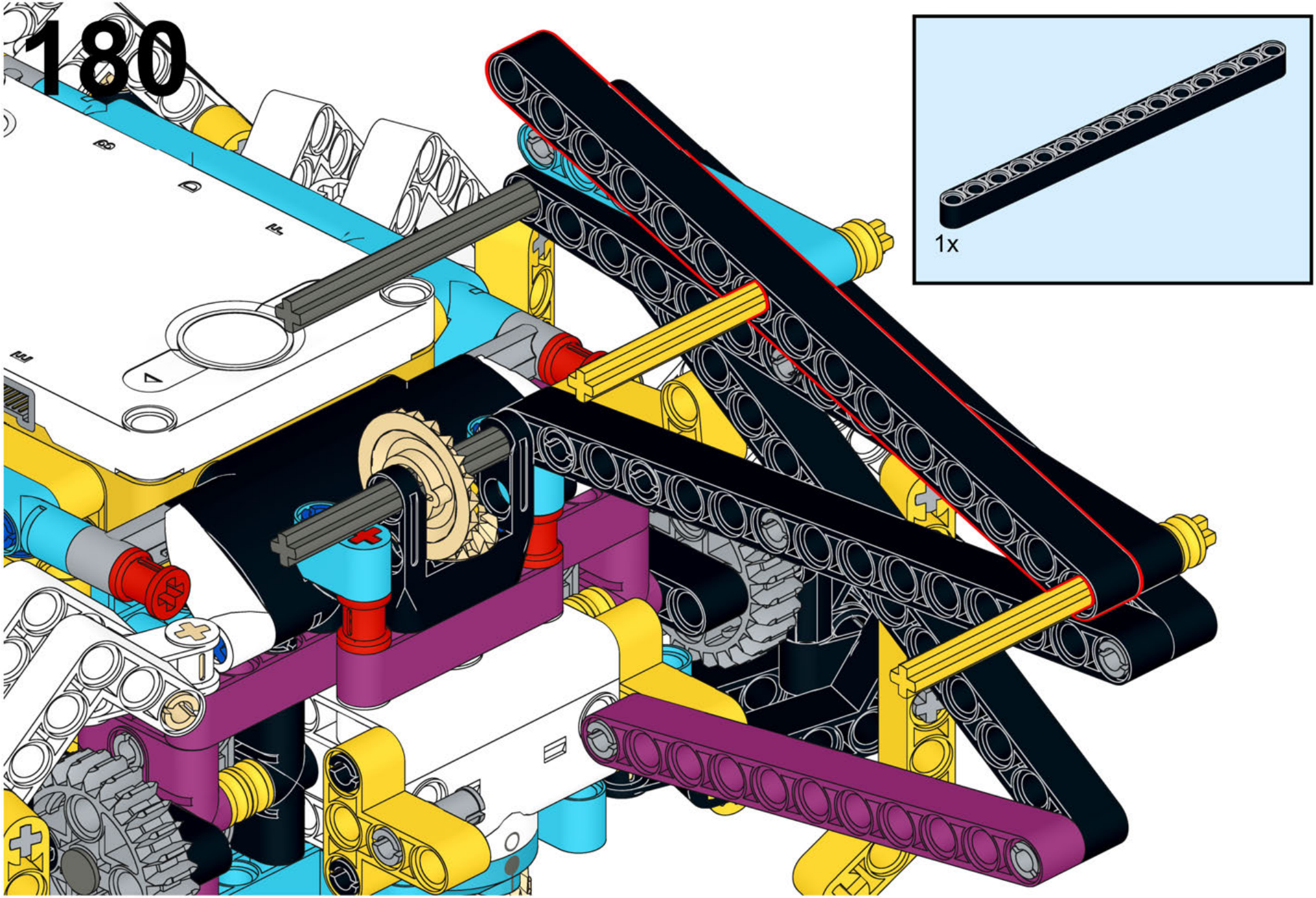
180
1x

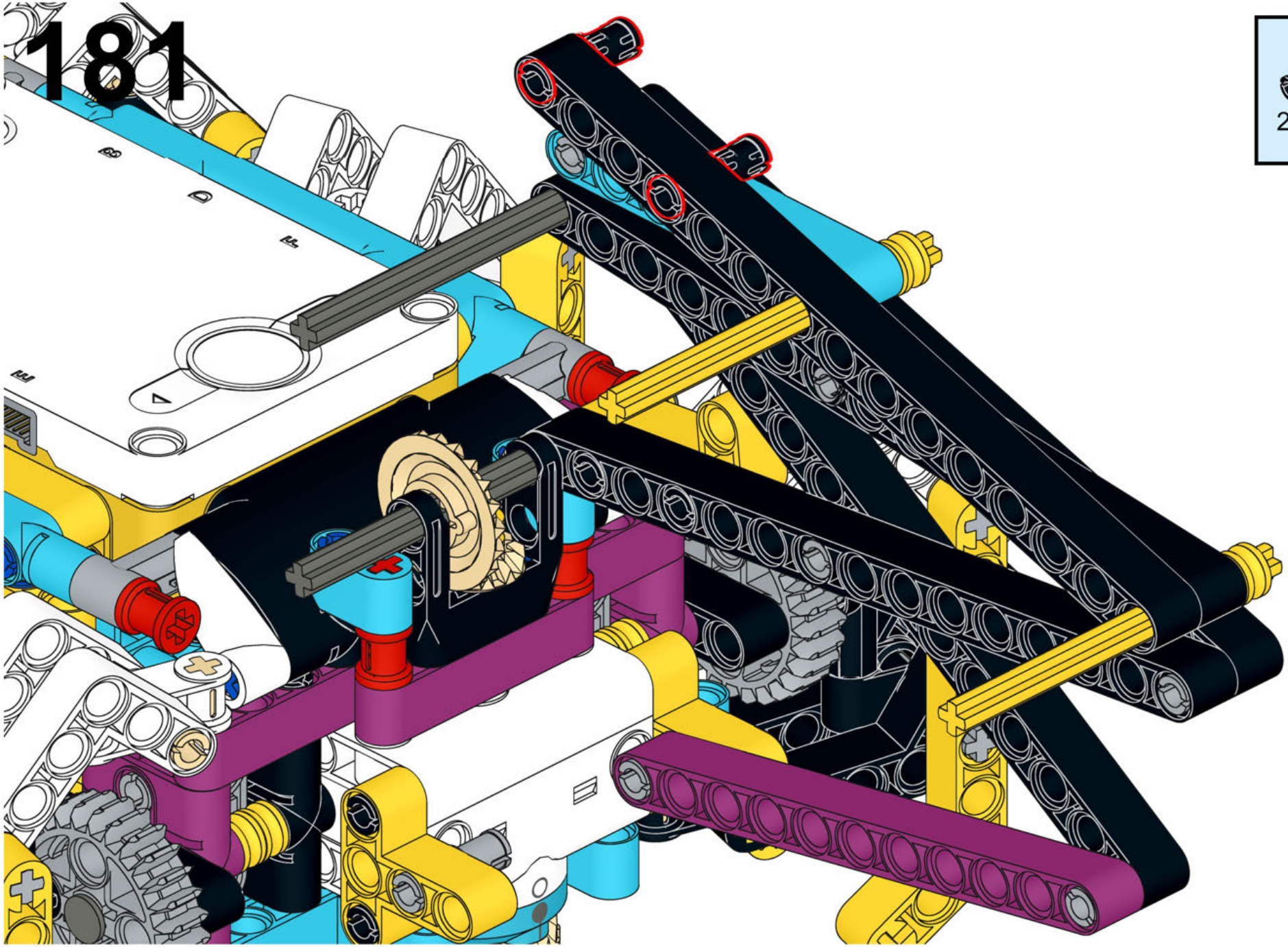
181

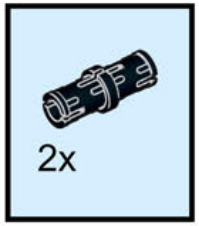
2x

182

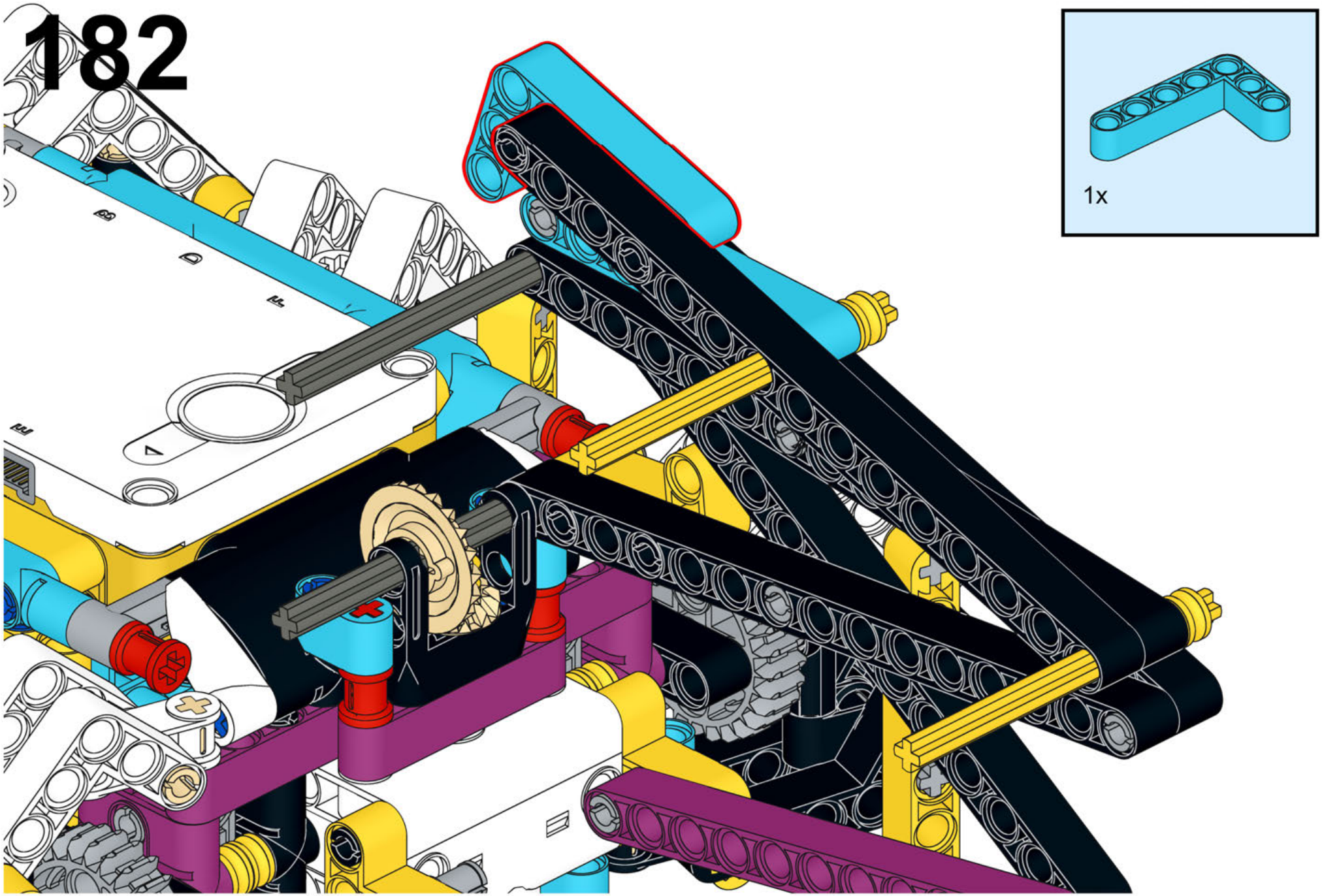

183

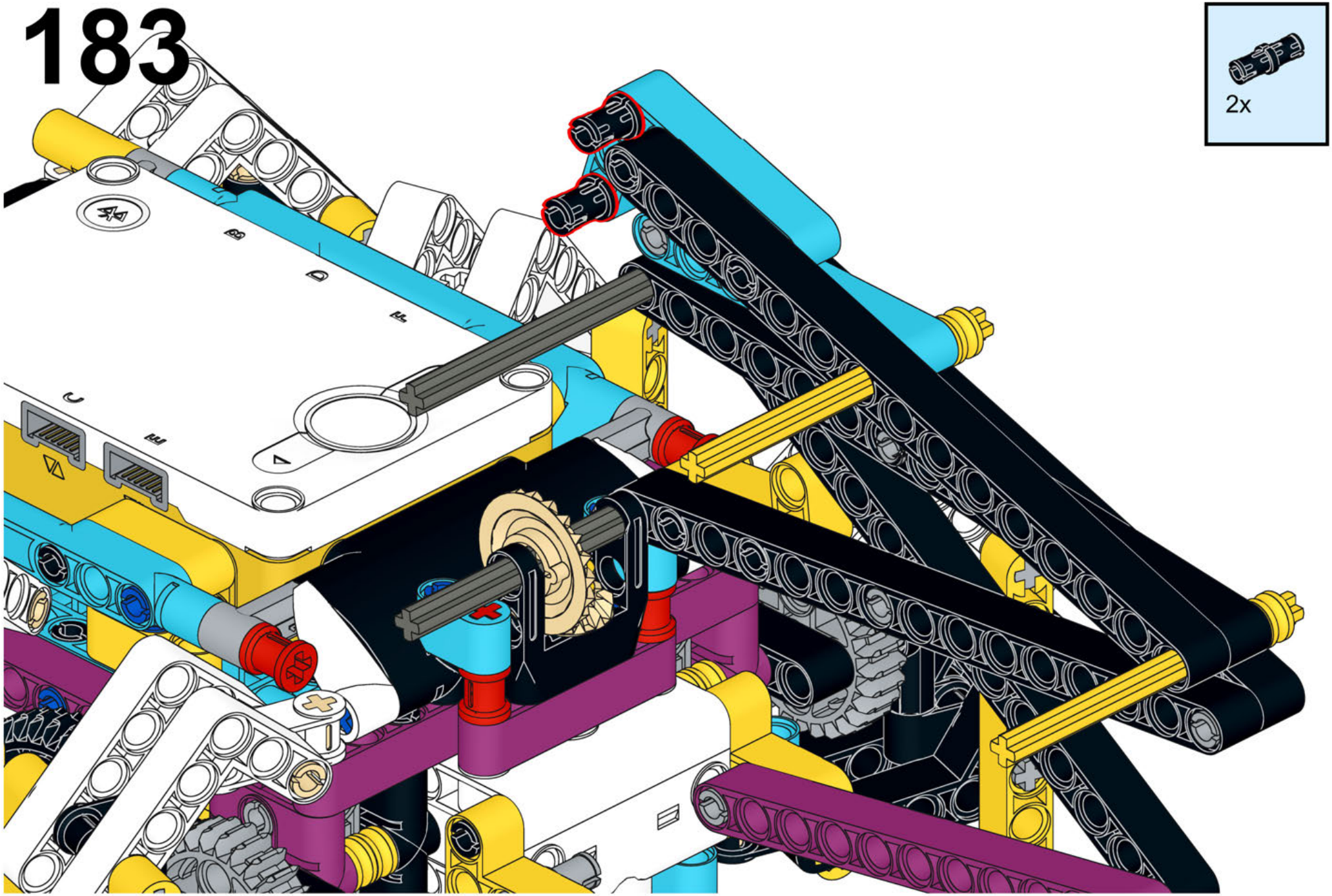

184

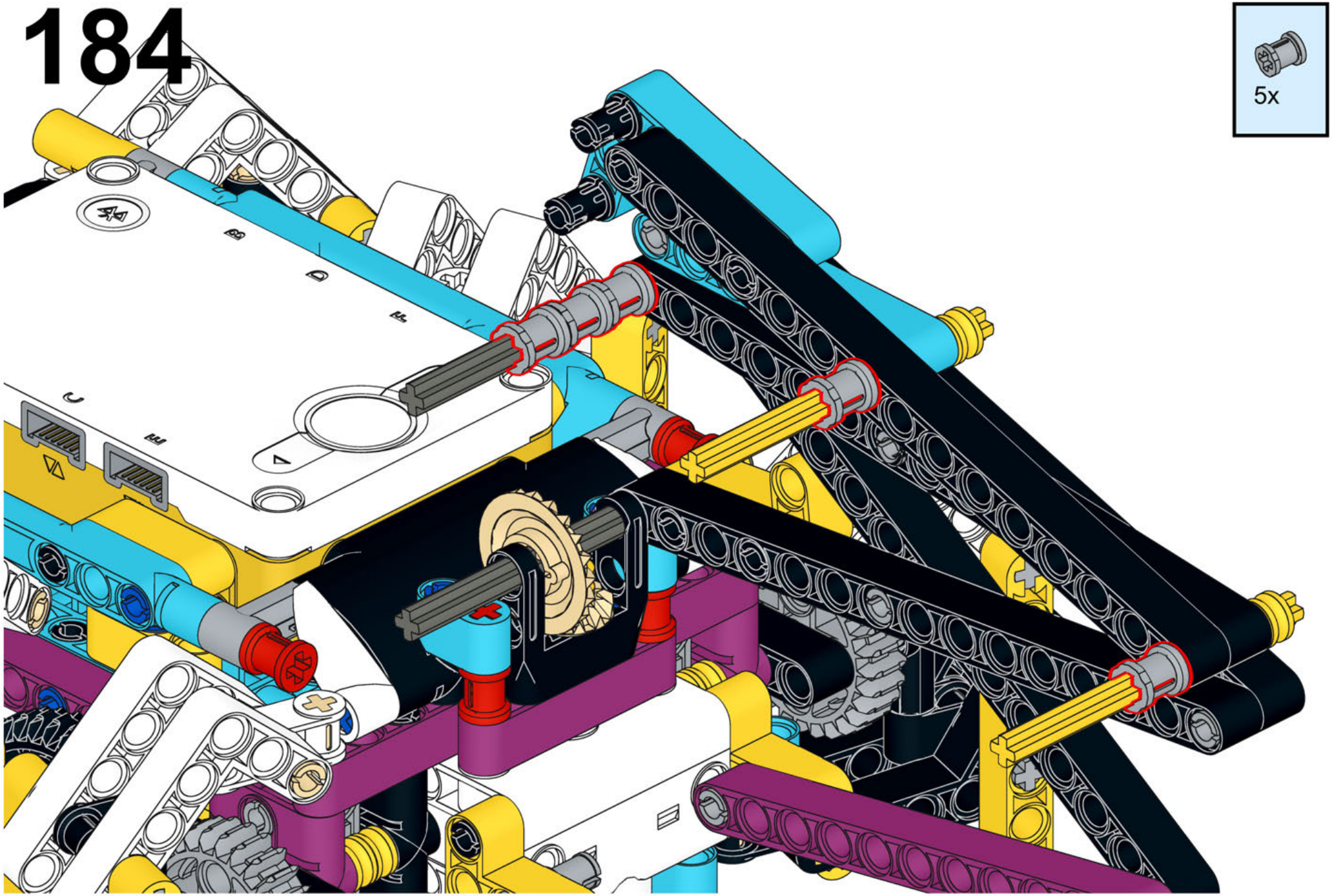

185

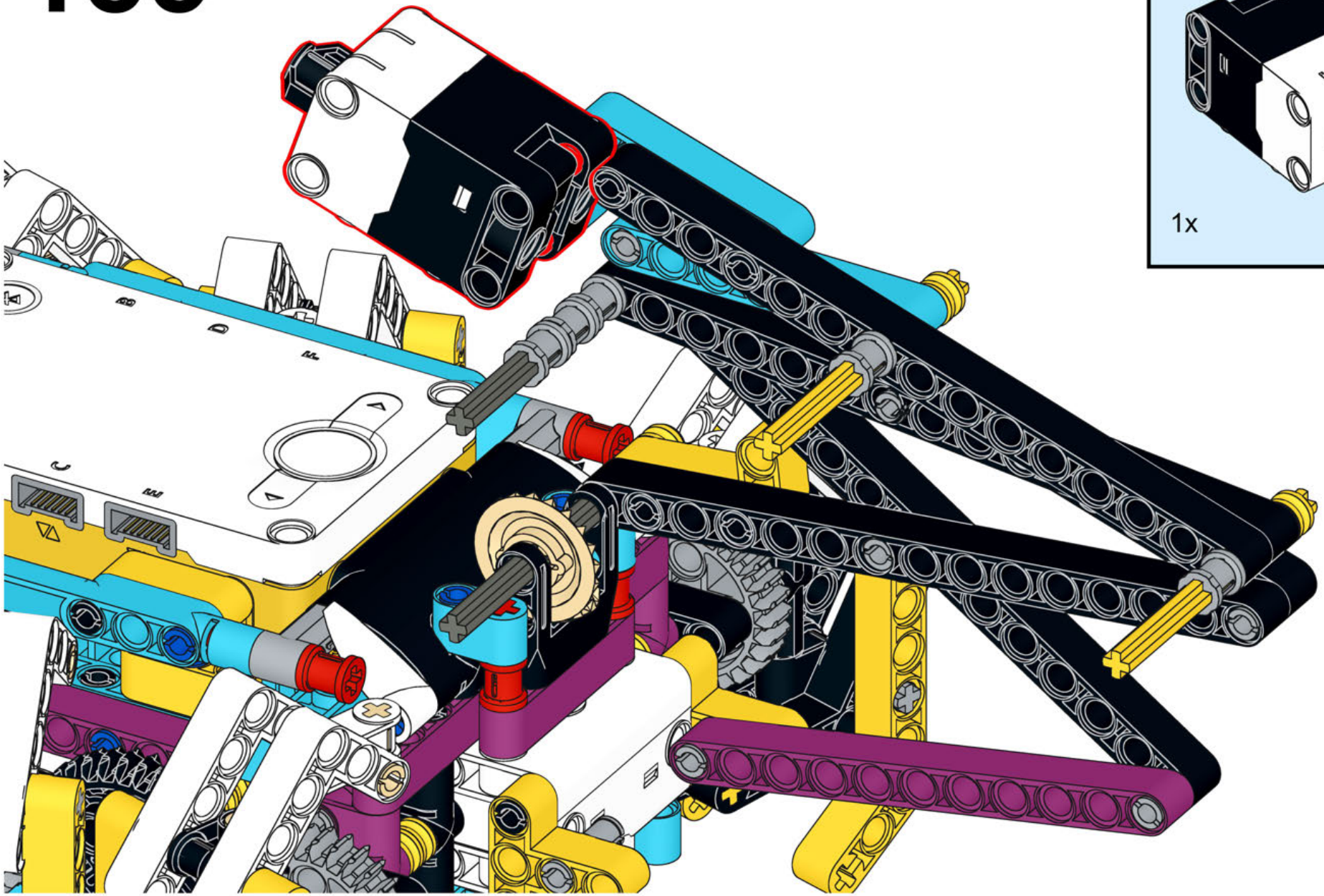

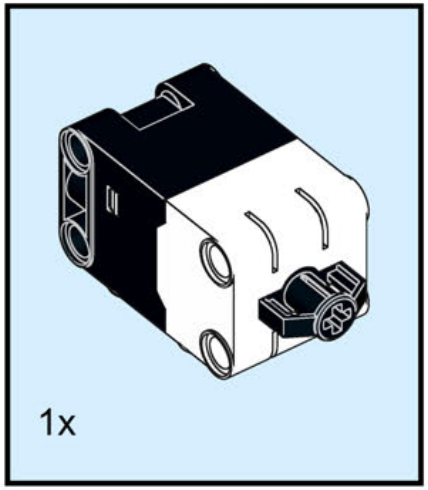

186

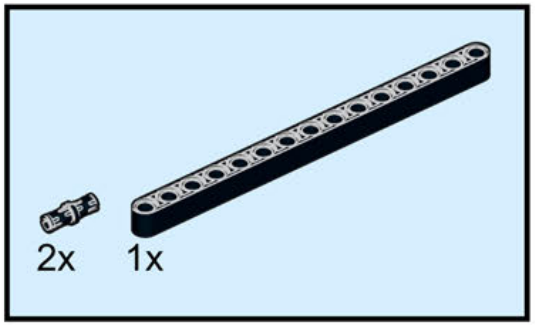

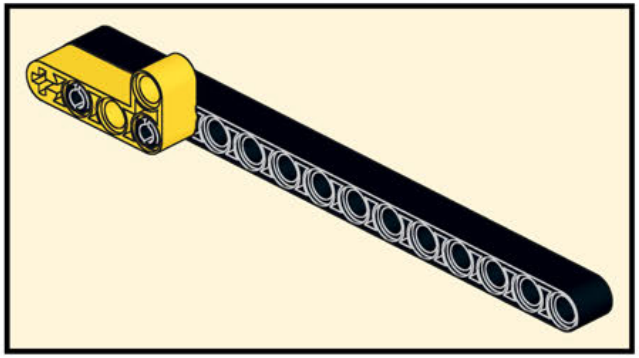

187

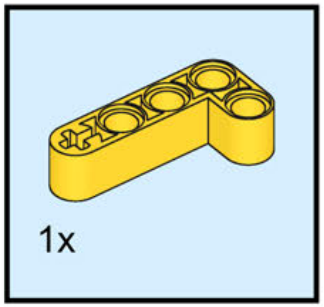

188

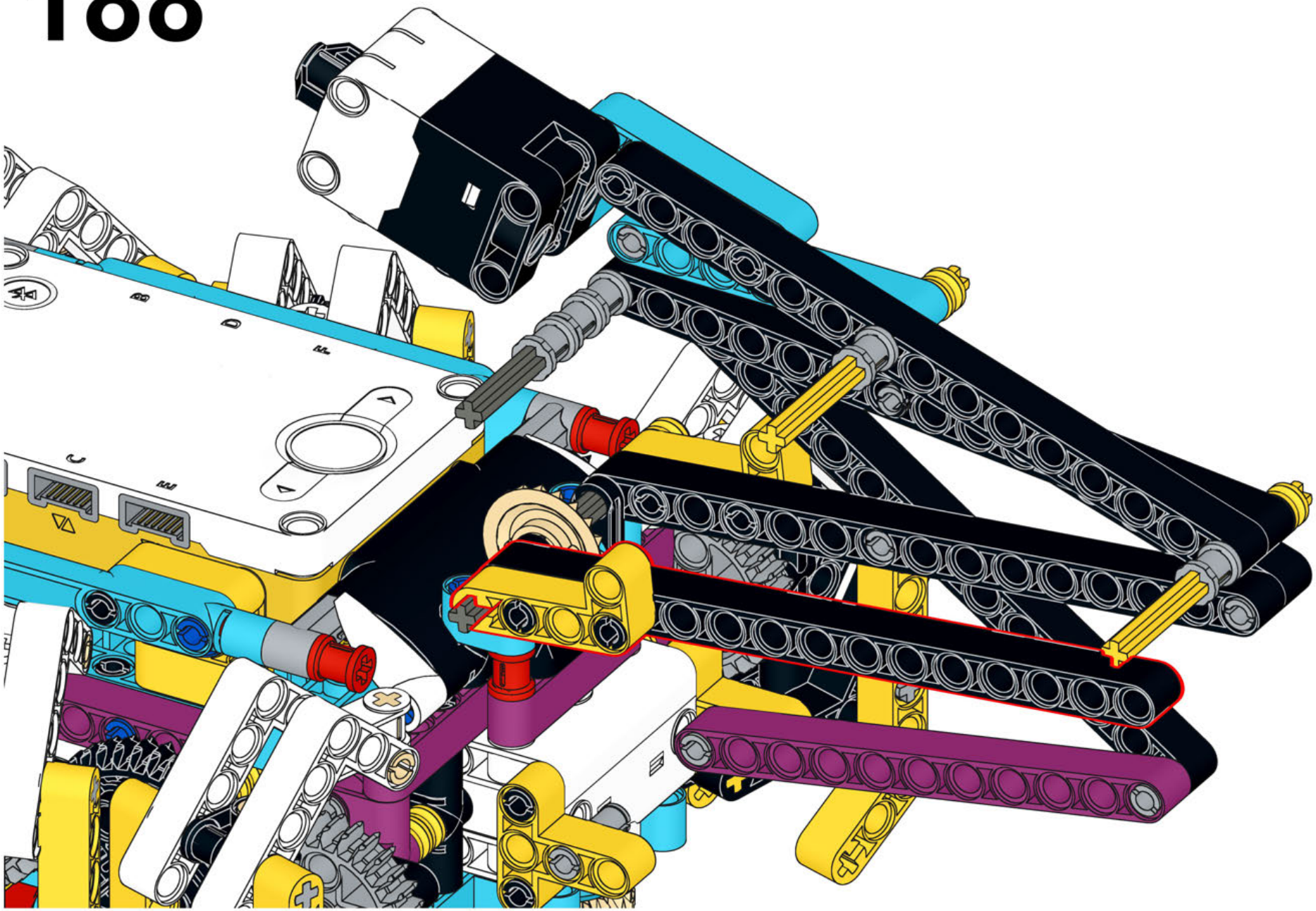

189

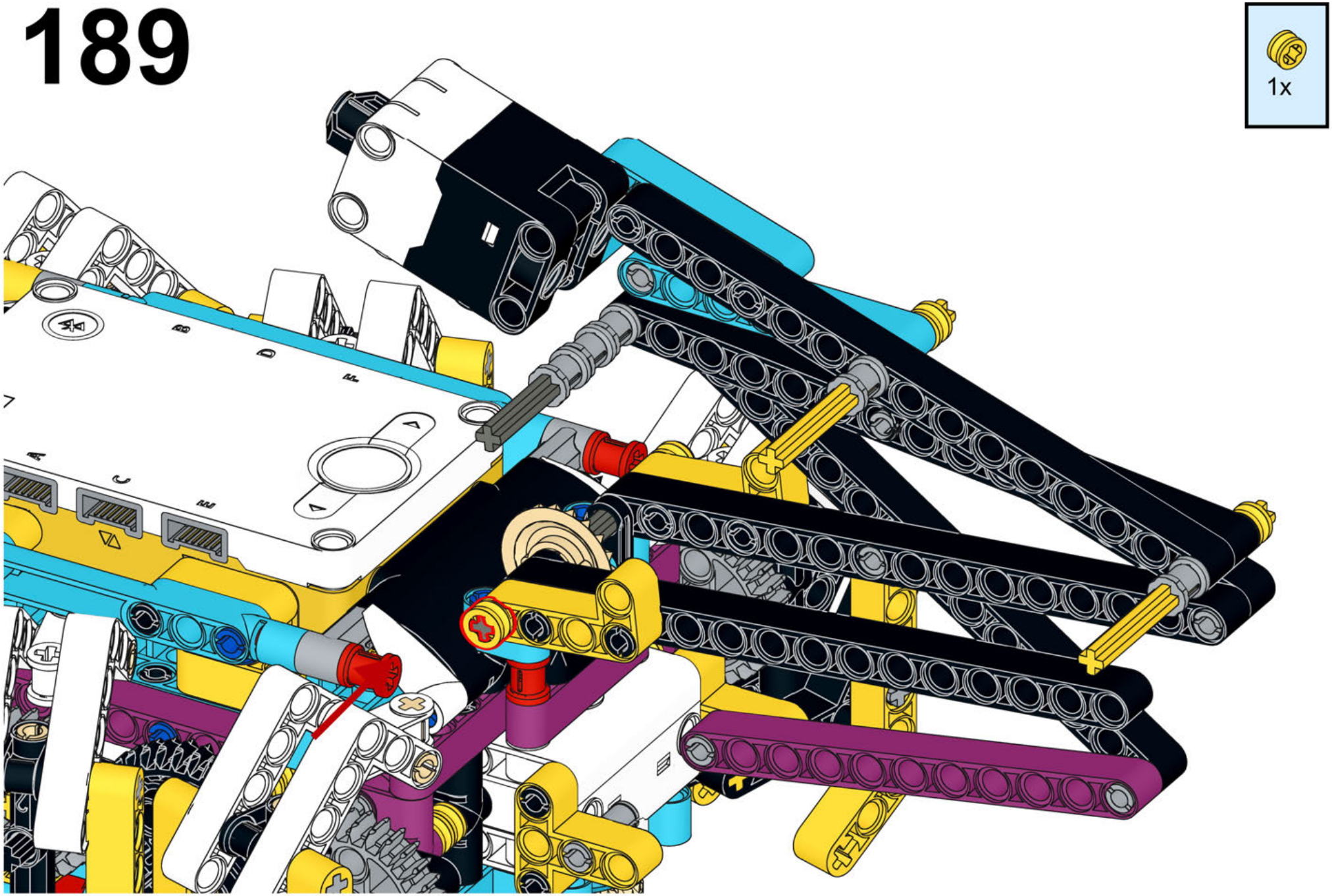

190

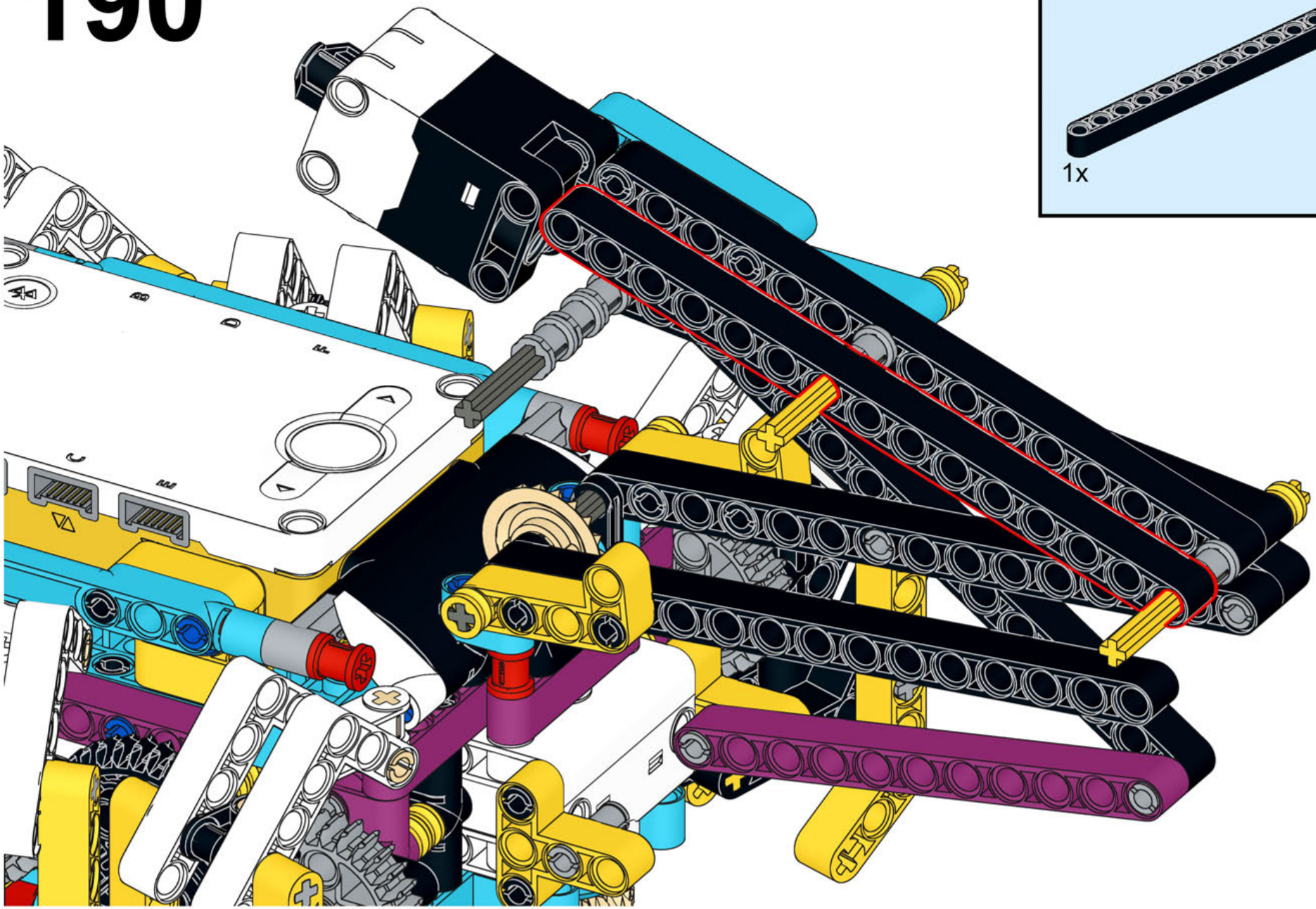

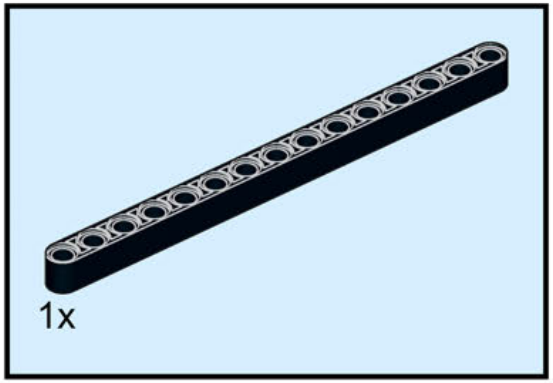

191

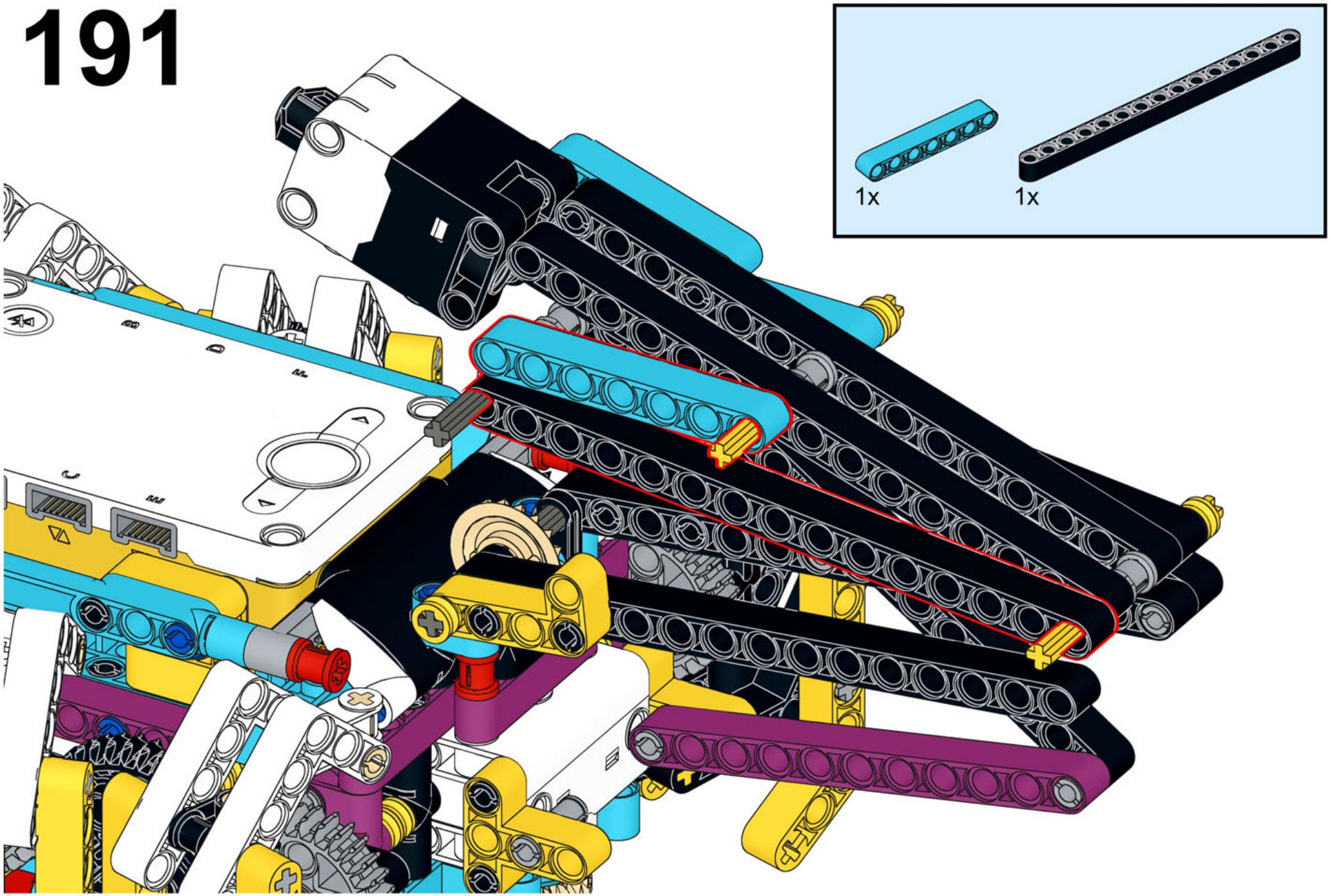

192

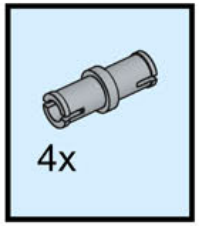

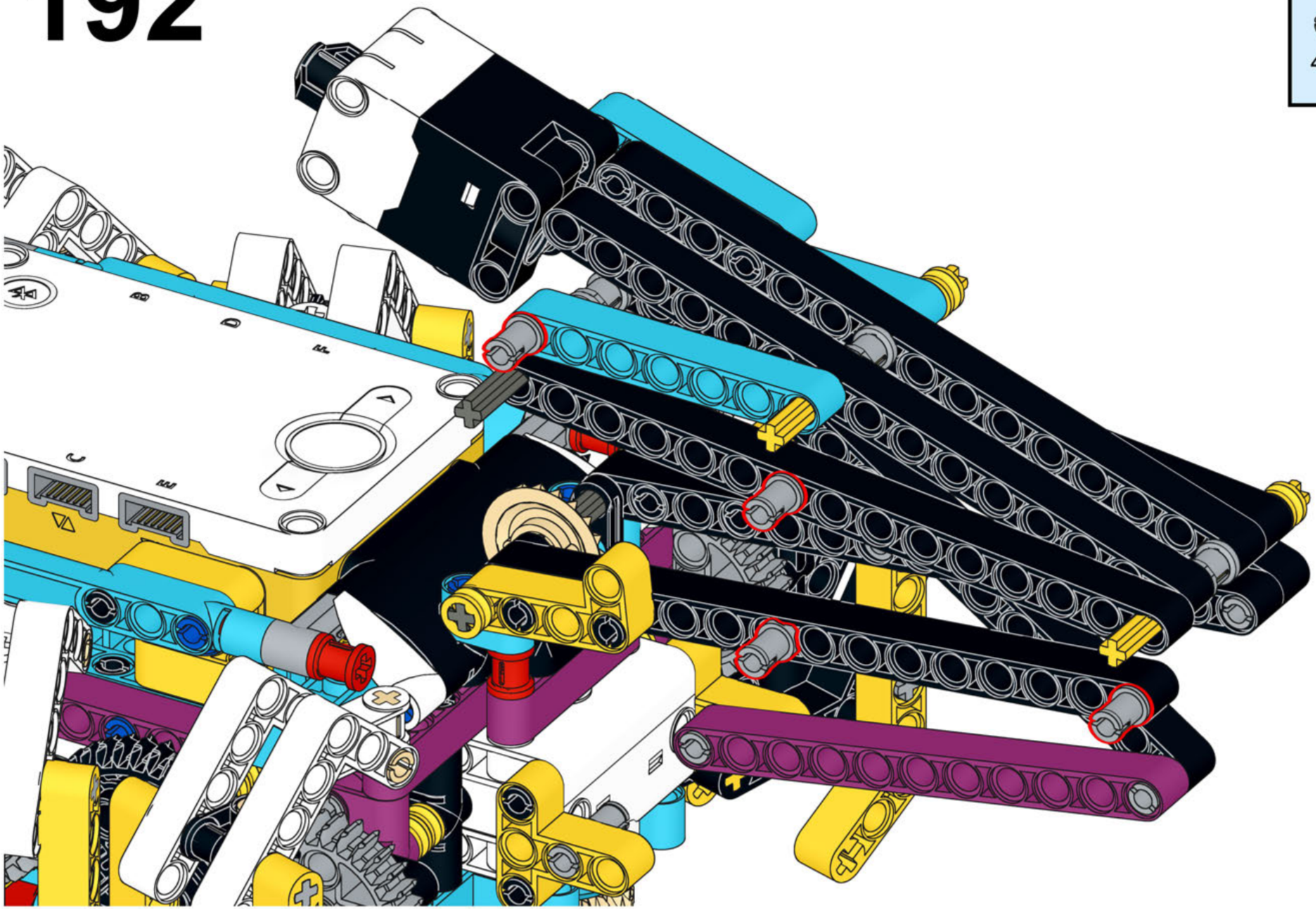

193

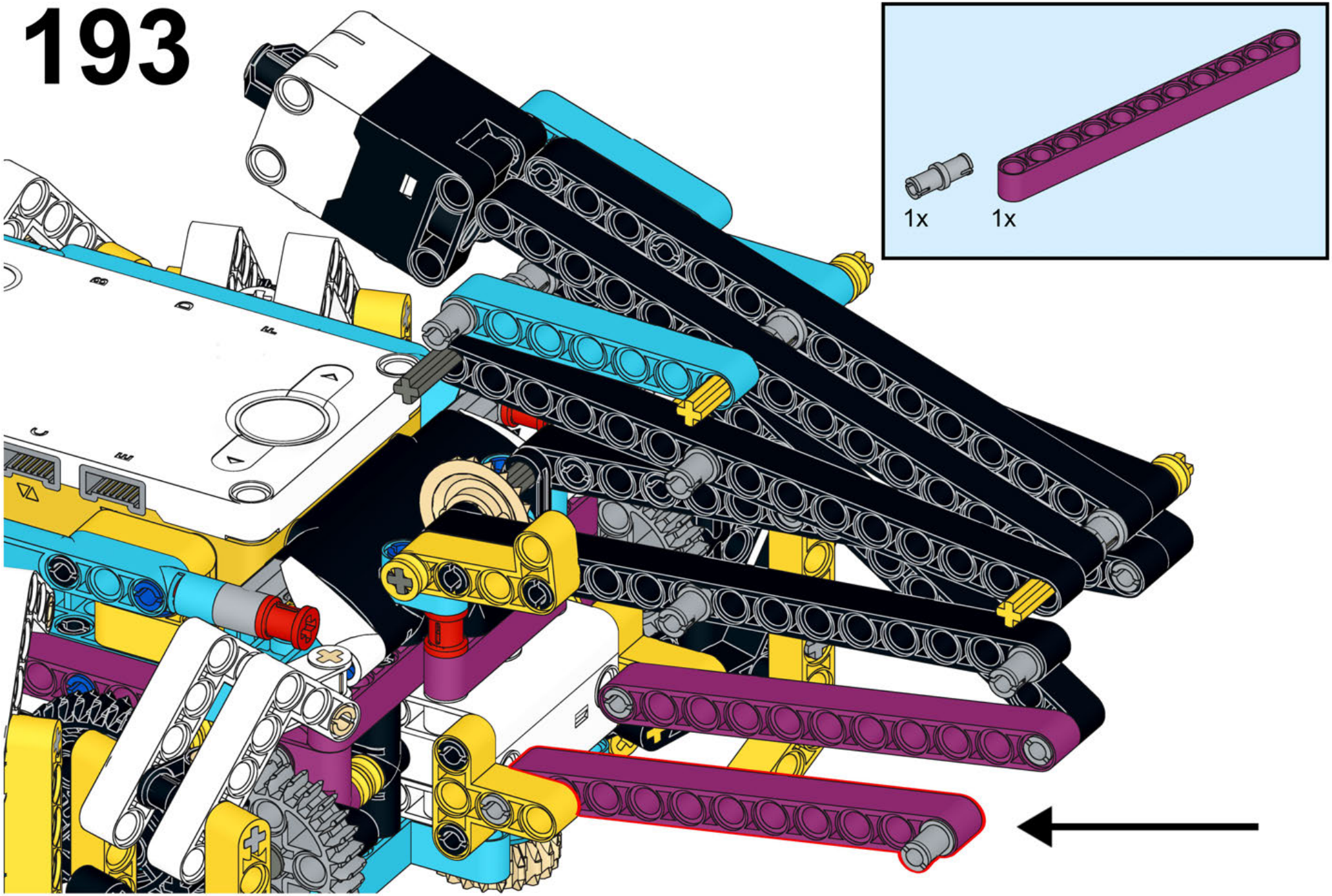

194

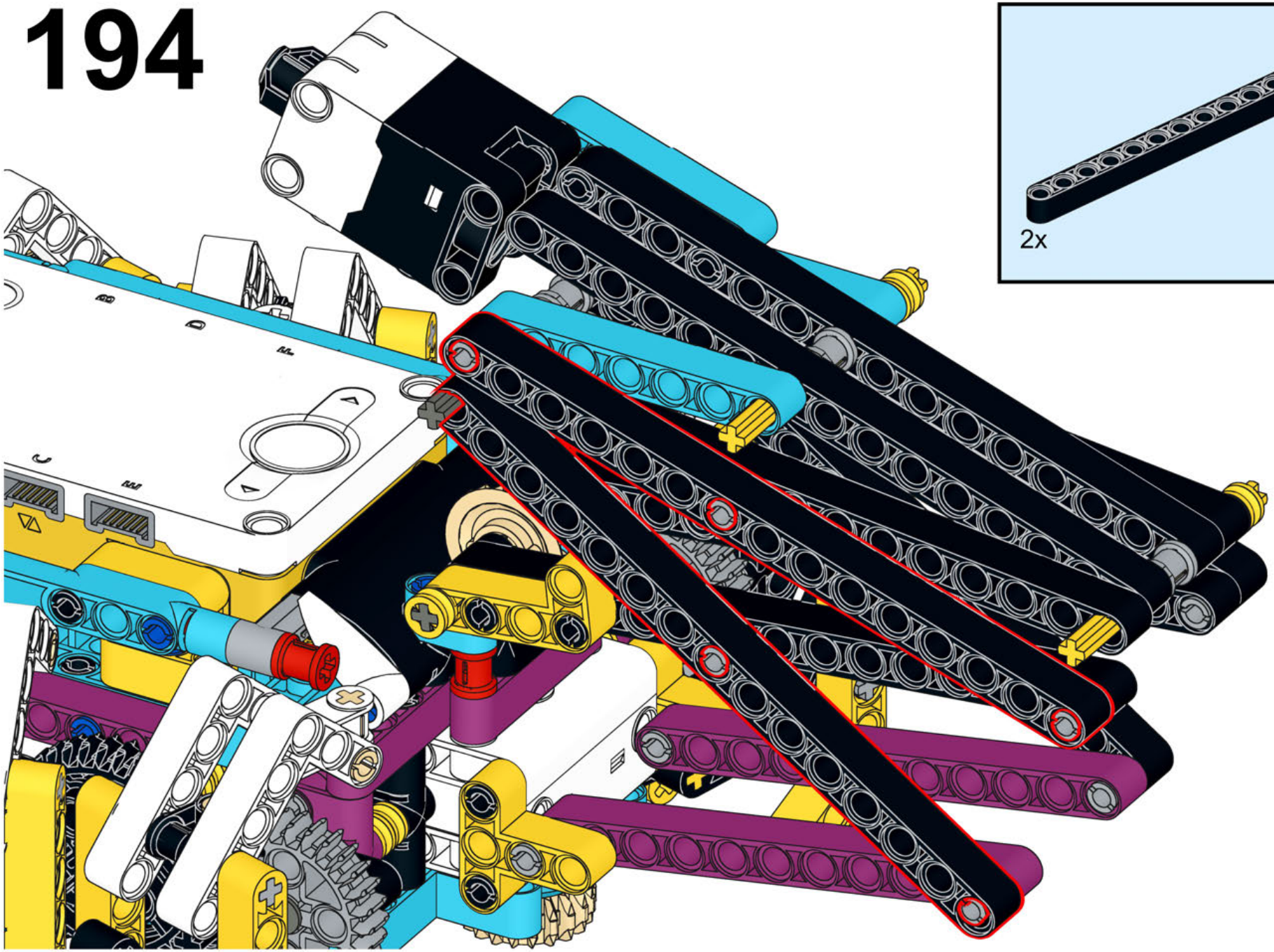

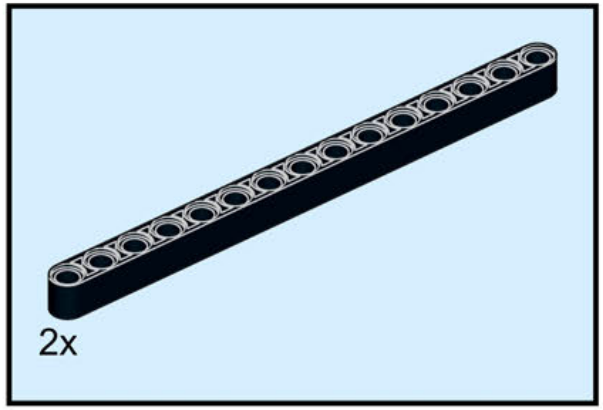

195

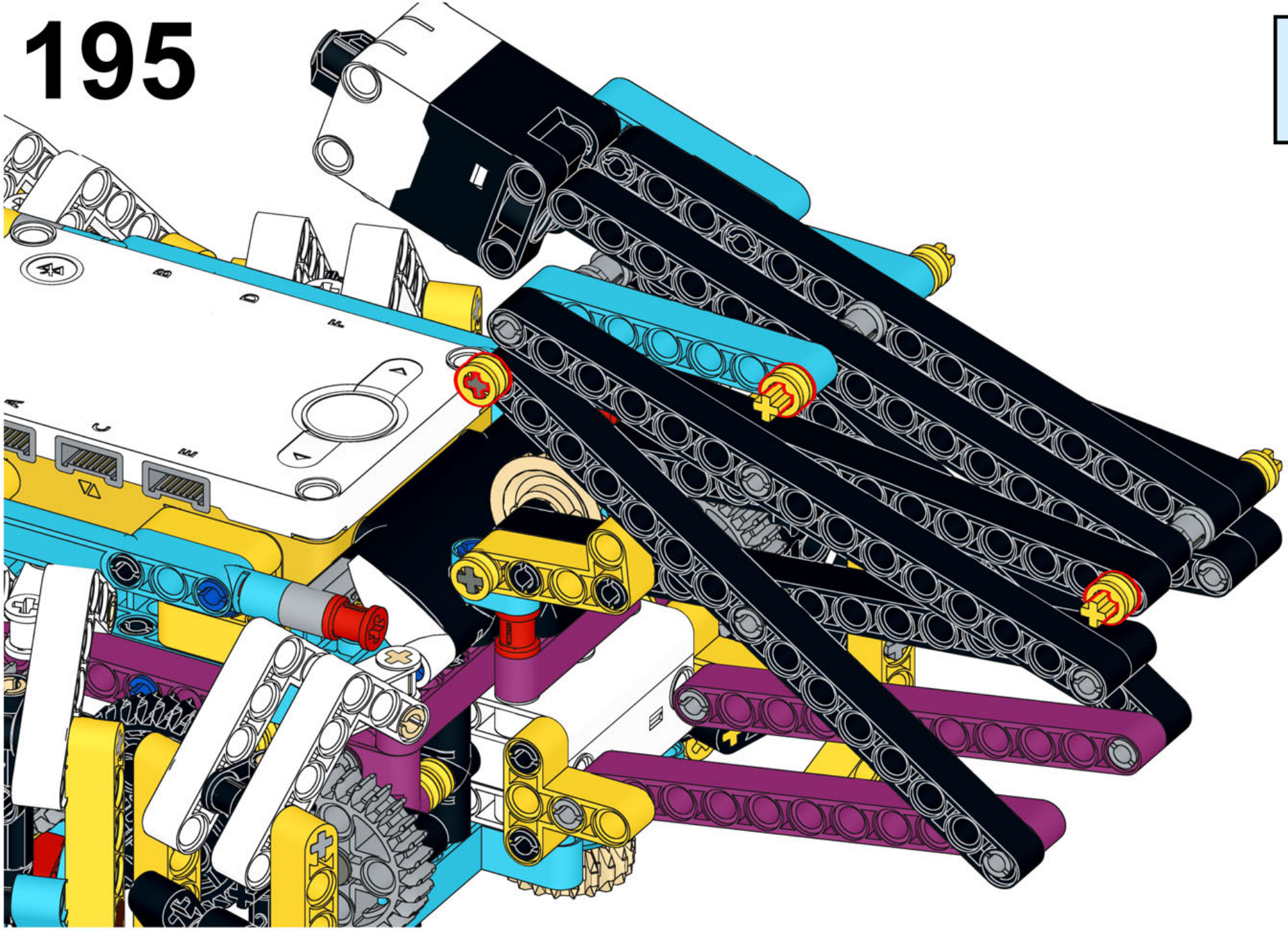

3x

196

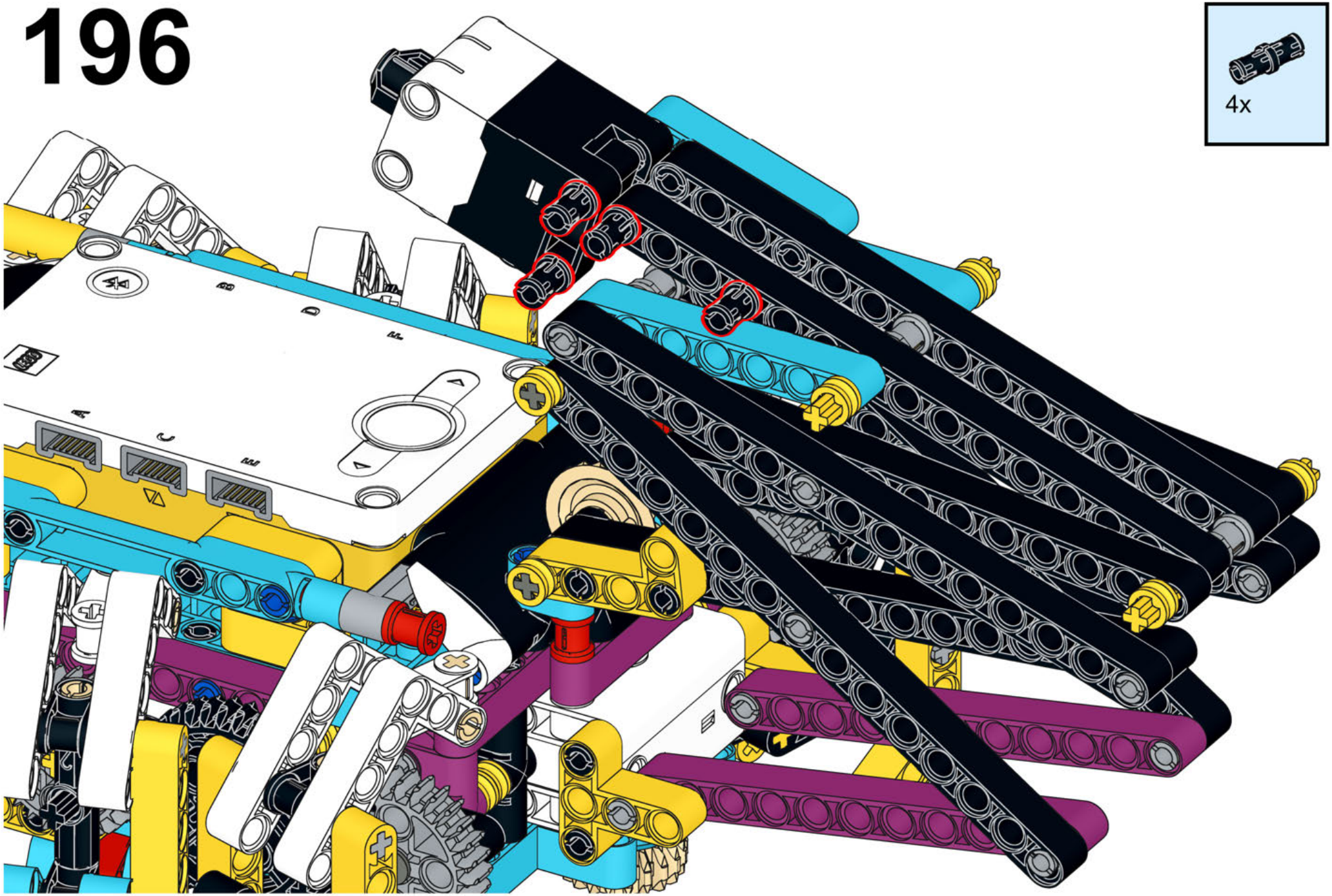

197

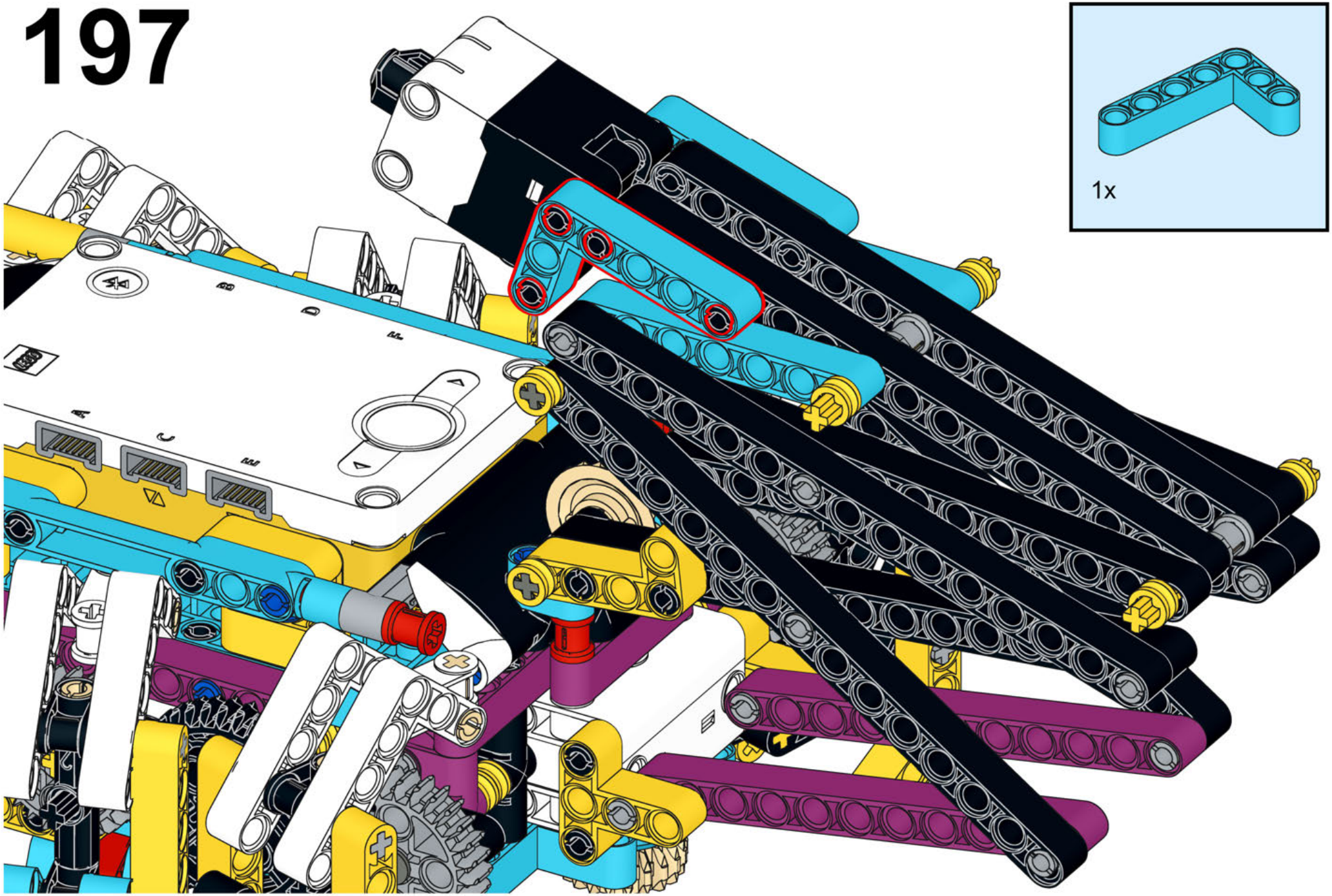

198

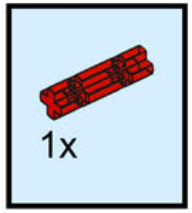

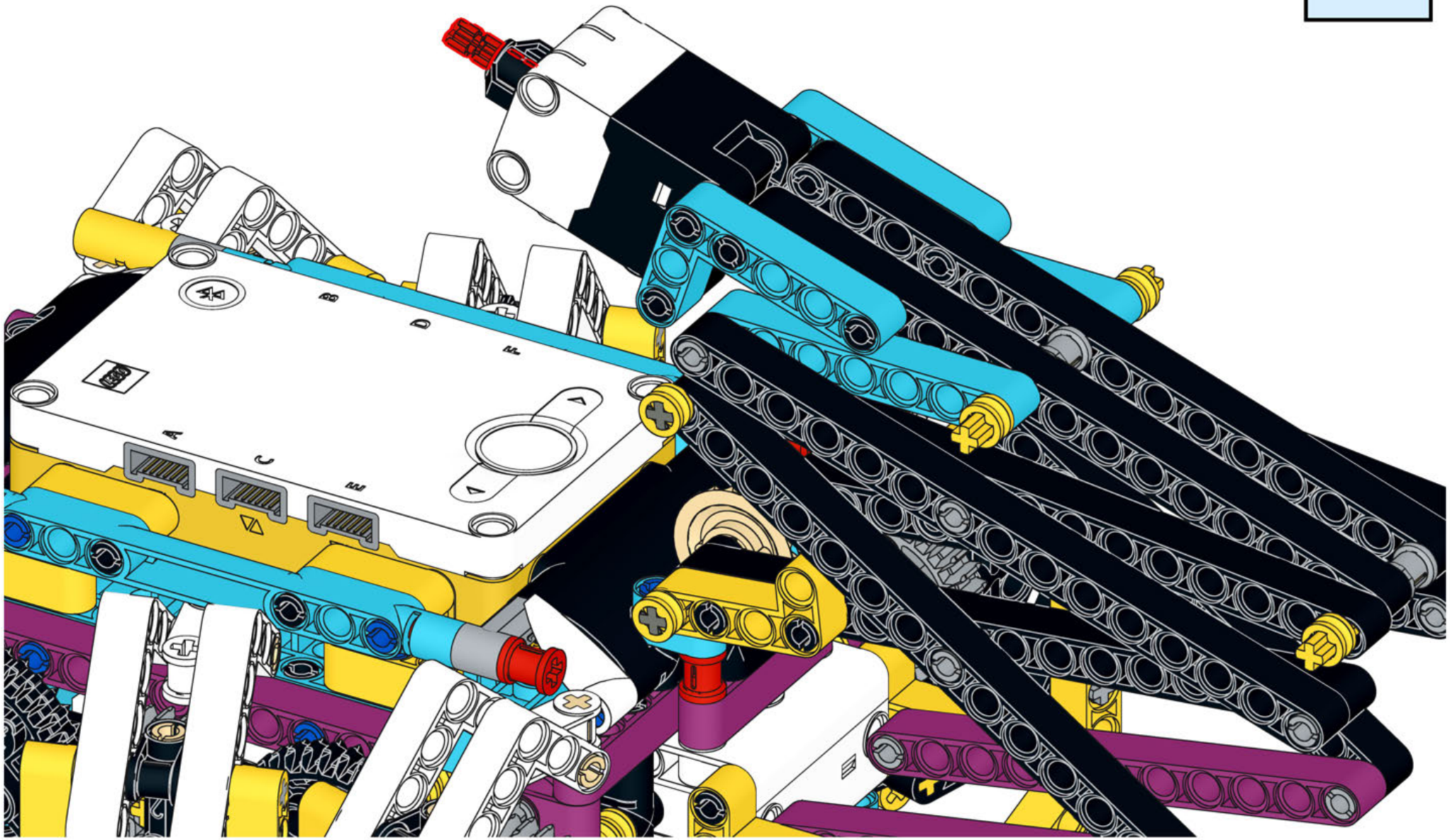

199

1x

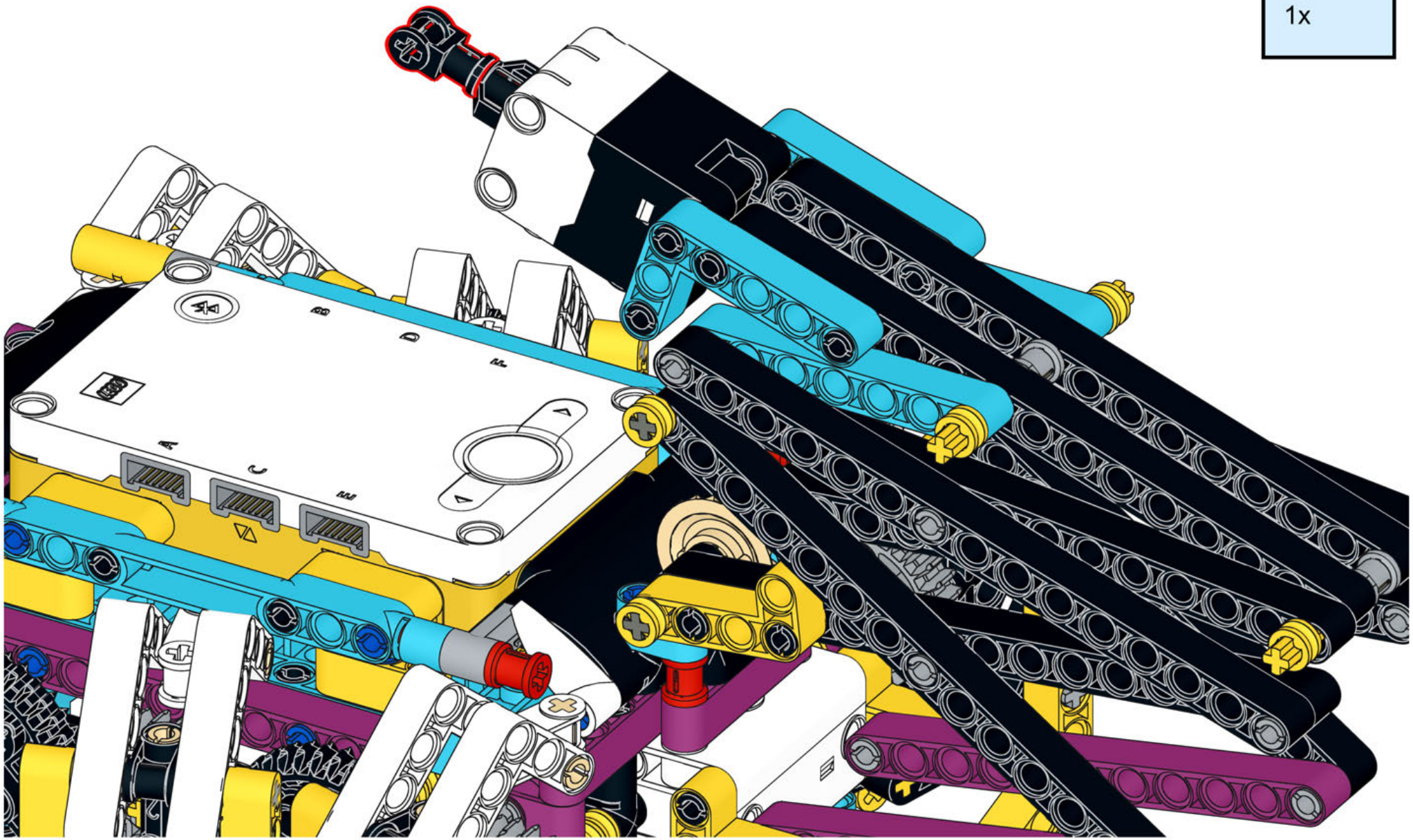

200

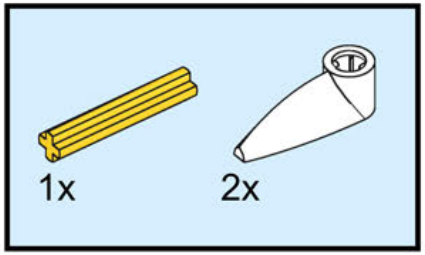

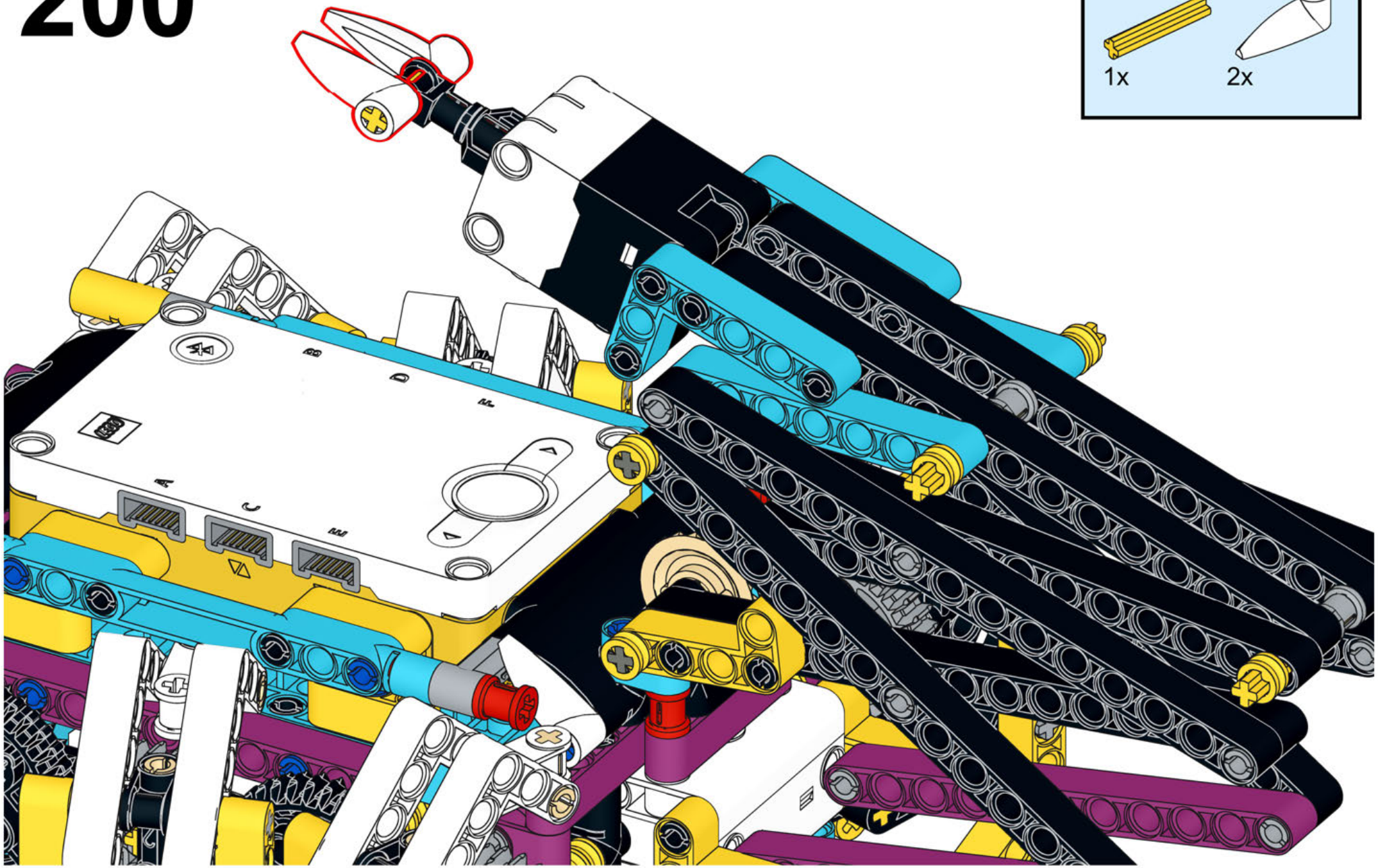

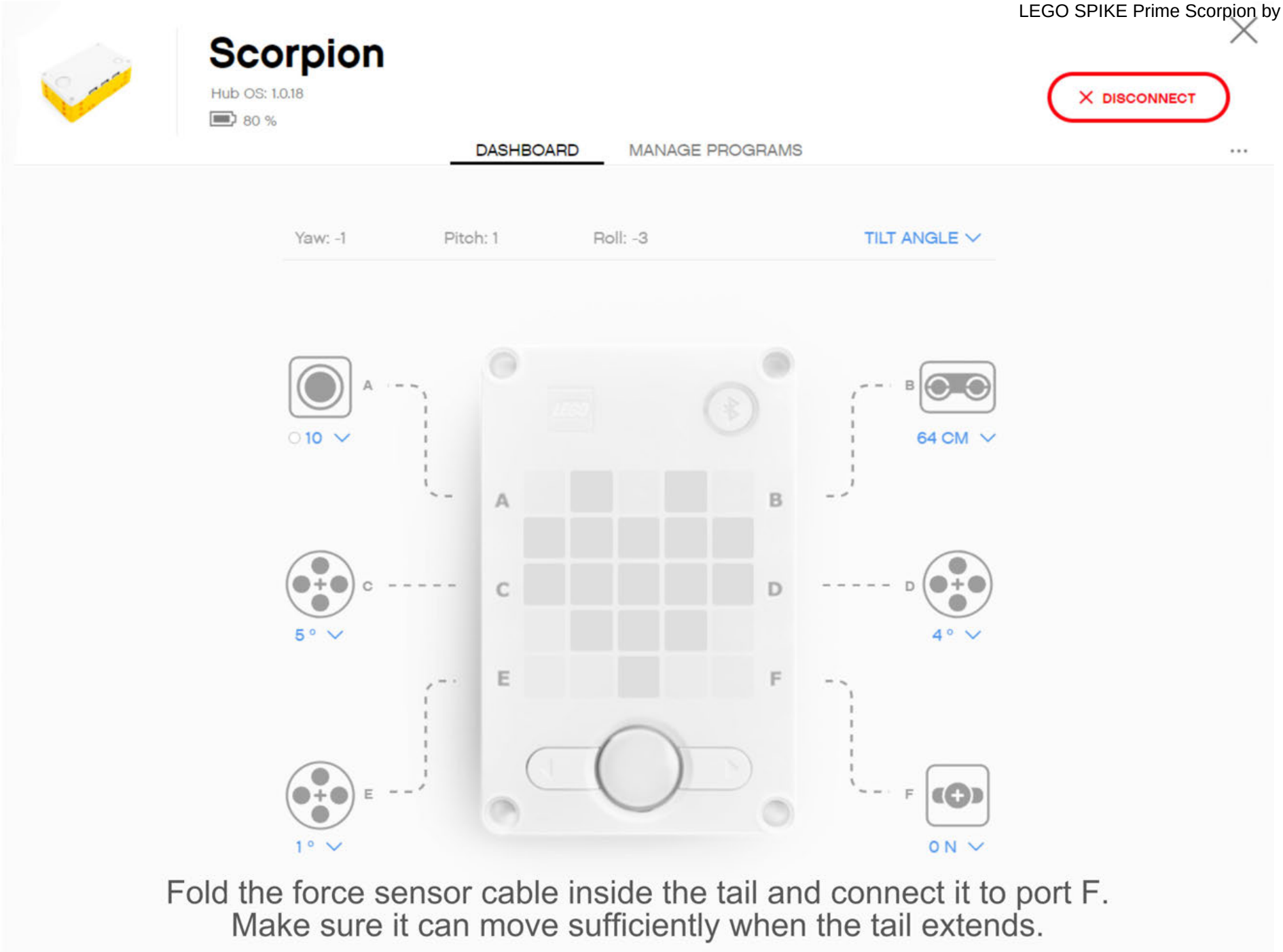
Scorpion
Hub OS: 1.0.18
80 %
DISCONNECT
DASHBOARD
MANAGE PROGRAMS
Yaw: -1
Pitch: 1
Roll: -3
TILT ANGLE
A
10
B
64 CM
C
5 °
D
4 °
E
1 °
F
0 N
Fold the force sensor cable inside the tail and connect it to port F.
Make sure it can move sufficiently when the tail extends.

201

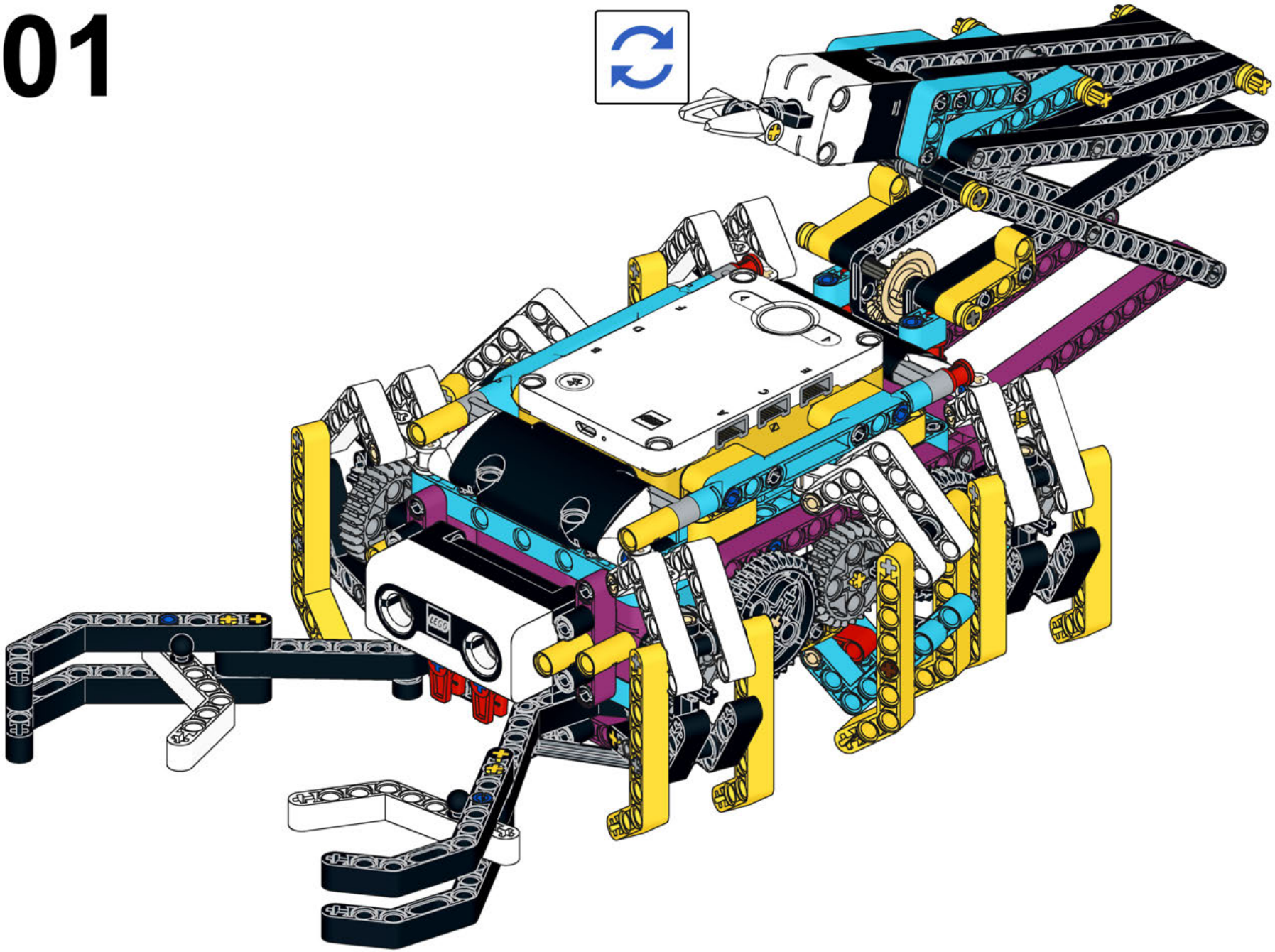

202 Write your own SPIKE Scorpion program.

Here an example with some tips.

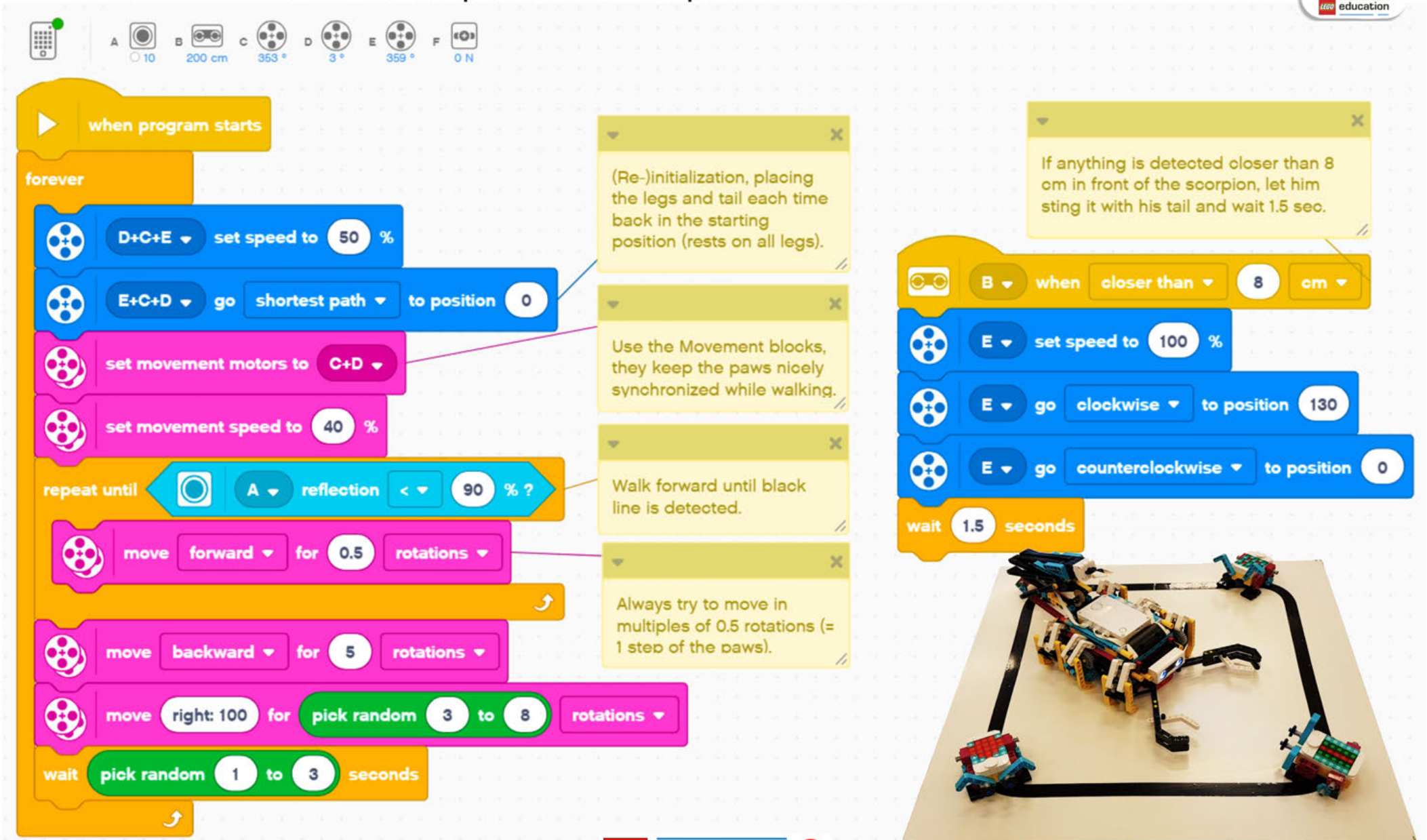

Free buildinginstructions & program:
www.legostudiovives.be/bouwideeen

203

Make a video of your SPIKE Scorpion and share it on YouTube or FaceBook!

SPIKE PRIME Scorpion

By Dimi

Free buildinginstructions & program:
www.legostudiovives.be/bouwideeen

LEGO education vives
INNOVATION STUDIO

Parts list:

4x
18654, 11

6x
32034, 11

2x
2739a, 11

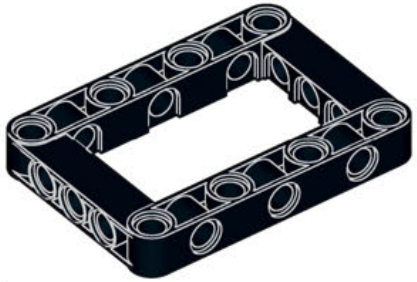
1x
64179, 11

10x
32278, 11

6x
6628, 11

1x
3705, 11

8x
32348, 11

88x
2780, 11

3x
60484, 11

5x
40490, 11

4x
87083, 85

16x
6536, 11

4x
32498, 11

2x
55013, 85

1x
32039, 11

1x
87408, 11

6x
32009, 11

5x
3713, 86

6x
18651, 11

4x
39793, 11

2x
24119, 11

12x
3673, 86

4x
32013, 86

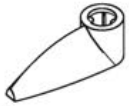
6x
x346, 1

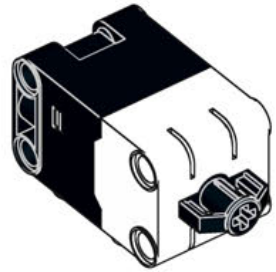
1x

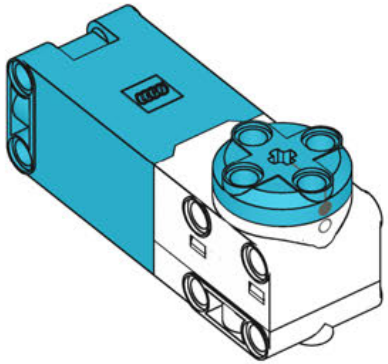
2x

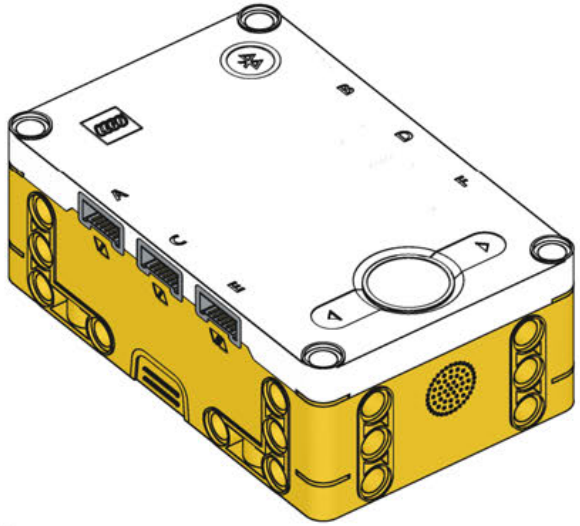
1x

2x
87082, 86

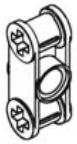
6x
32184, 1

5x
48989, 86

1x

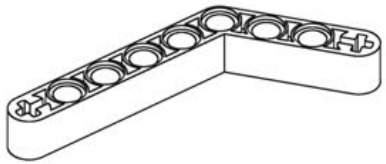
2x
6629, 1

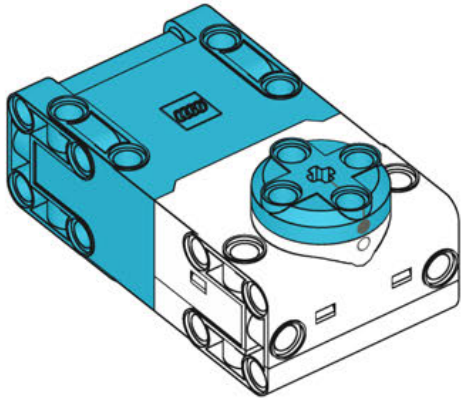
1x

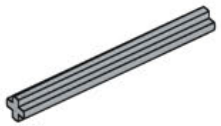
10x
32073, 86

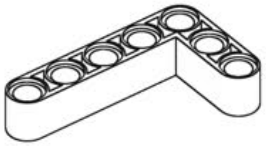
12x
32526, 1

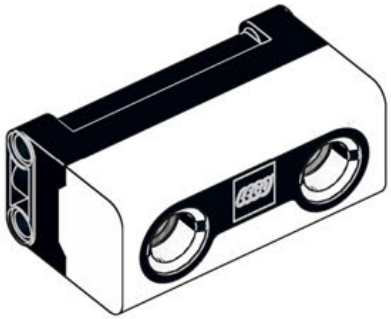
1x

4x
32062, 5

2x
49283, 5

6x
46372, 86

10x
32054, 5

2x
42003, 5

2x
15462, 88

1x
32269, 2

2x
60484, 3

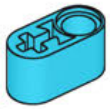

2x
60483, 156

28x
3749, 2

17x
4265c, 3

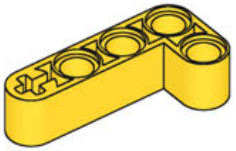

4x
32140, 3

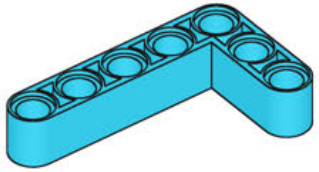

8x
32526, 156

1x
6589, 2

6x
62462, 3

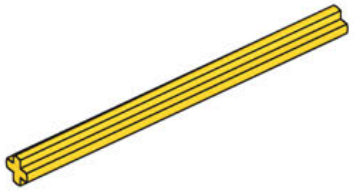

2x
44294, 3

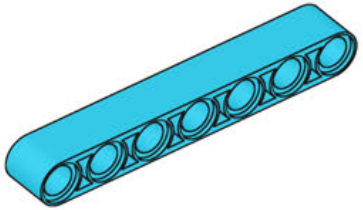

2x
32524, 156

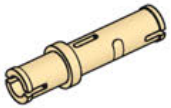

8x
32556, 2

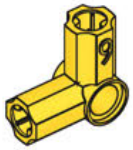

2x
32014, 3

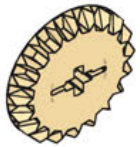

1x
32198, 2

12x
4519, 3

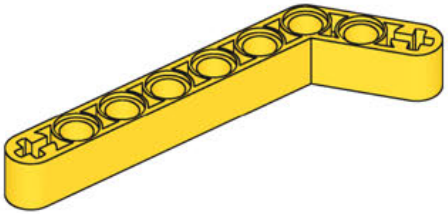

12x
32271, 3

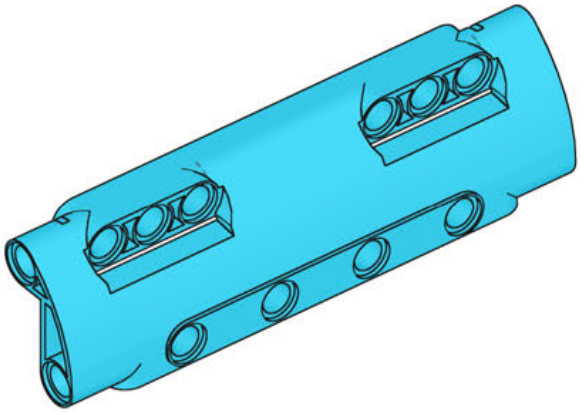

2x
11954, 156

9x
32523, 3

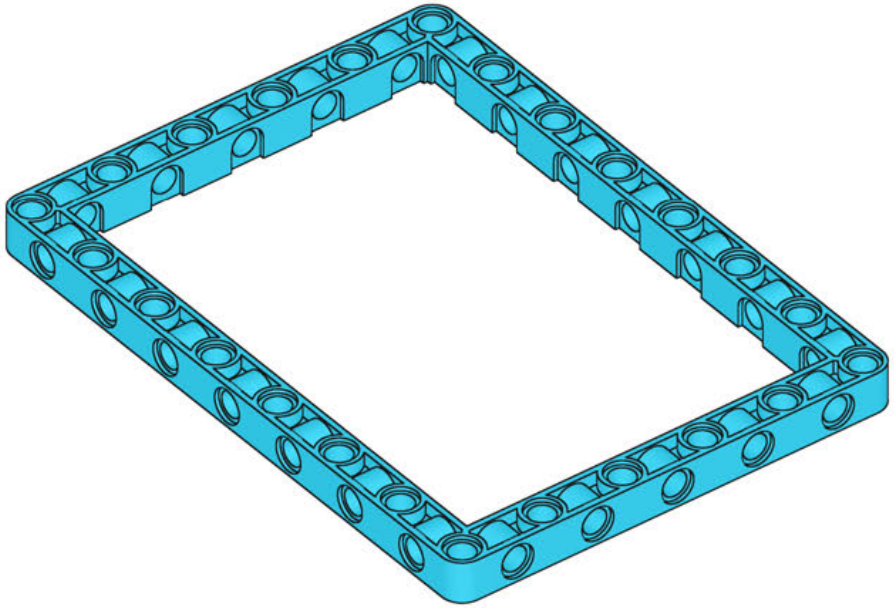

2x

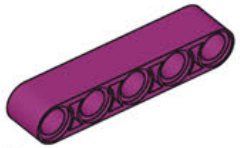

5x
32316, 71

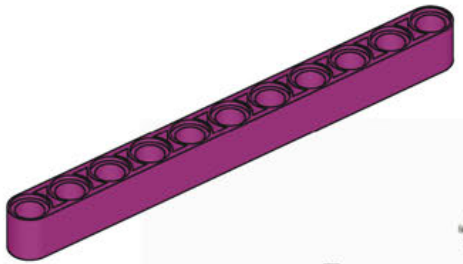

6x
32525, 71

Made with
Studio 2.0

14x
43093, 7

23x
6558, 7

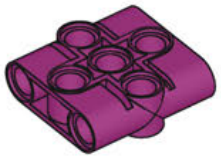

4x
39793, 71

© 2020 Dimitri Dekyvere
LEGO® Education Academy
certified STEM Teacher Trainer
LEGO® is a registered trademark of
the LEGO Group, which does not
sponsor, endorse, or authorize these
instructions or the model they depict.

RATO Education
Authorised LEGO® Education Partner